Public Works Construction Standards

Revised August 2011

CITY OF WHEATLAND

PUBLIC WORKS

CONSTRUCTION STANDARDS

In Accordance With:

Section 17.08

Of the Wheatland Municipal Code

And

Adopted by Resolution No. 14-92

Of the Wheatland City Council on

May 18, 1992

And

Revision Adopted by

Wheatland City Council on

August 9, 2011

I N D E X

Section	Page No.
Introduction	1
General Design Criteria	2
Improvement Plans- Required Contents	4
Survey Monumentation	5
Street Design Criteria	6
Compaction Requirements in Streets	13
General Underground Requirements	14
Water System Design Criteria	15
Sanitary Sewer Design Criteria	19
Storm Drain Design Criteria	22

EXPRESSION OF GRATITUDE

The City of Wheatland wishes to express gratitude to the City of Gridley, and specifically to the City Engineer, Mr. Ray Rolls. for the sharing of information which formed the basis of these Standards.

INTRODUCTION

Regarding the design and construction of Public Works Improvements, the City of Wheatland is particularly concerned about:

Accurate establishment of grades, and careful construction practices to maintain the design grades.

Watertightness of gravity pipelines and structures.

Adequate construction and safety procedures regarding shoring, bracing, and dewatering of all excavations.

Building pad elevations established above potential high water elevations, with adequate lot grading to the back of sidewalk.

STANDARD SPECIFICATIONS

It is intended that these Construction Standards are to be used in conjunction with the State of California Department of Transportation Standard Specifications.

Earthwork, grading, paving, and concrete work shall conform to the applicable sections of the State Standard Specifications, unless modified by these Construction Standards.

GENERAL DESIGN CRITERIA

GENERAL DESIGN CRITERIA shall apply to the design of all improvements within the City of Wheatland which are subject to review by the City Engineer.

DRAWINGS shall be on standard size sheets (22' x 34", 24" x 36", 11" x 17", or 8-1/2" x 11") with standard title block. All lettering shall be 1/8" or larger to permit photographic reduction.

TITLE SHEETS shall have an index or key map clearly indicating the sheet numbers for all drawings. Title sheets shall have approval signature spaces for the following individuals:

Design Engineer	Developer
Public Works Director	City Engineer

Any other entity requiring review and approval of all or portions of the plans shall also be provided with approval signature space.

DESIGNER shall sign each sheet. Designs for structures, and other design subjects required by law to be designed by a Registered Engineer or Architect shall be signed and stamped by the Registered Engineer or Architect.

SOILS REPORT shall, when required, be signed by a Registered Engineer or Geologist.

REVISIONS TO ORIGINAL DRAWINGS must be initialed by the Design Engineer and approved by the City Engineer.

IMPROVEMENTS are to be designed and constructed in accordance with these Public Works Construction Standards.

SUBDIVISIONS shall have improvement drawings showing overall layout of the water, sewer, storm drainage, and streets. Public utility locations shall be shown on the as-built plans for all projects.

PROFILES shall be shown on the improvement drawings for streets and street improvements. Vertical curves shall show all curve data, i.e., length, beginning, ending, P.I., etc. Typical design data shall be shown on all sheets, i.e., elevations, stationing, etc.

SCALE for improvement shall normally be 1" = 40' for the horizontal and 1" = 2' for the vertical. The vertical scale should be changed to 1" = 5', or other appropriate scale where depths are great. For complex plans the scale shall be 1" = 20' or larger as necessary for clarity.

GENERAL DESIGN CRITERIA

IMPROVEMENT PLANS shall be prepared in pencil or ink on vellum, unless otherwise approved by the City Engineer.

PLAN REVIEW PROCEDURE for the review and checking of plans submitted to the City Engineer is established to provide an expeditious and efficient plan review. Should a submittal be deemed incomplete by the City Engineer, the Design Engineer will be notified of deficiencies in the submittal, and review of the submittal package will not commence prior to receipt of all additionally requested information. Street survey control (horizontal and vertical), storm drainage, subdivision boundary and lot calculations, recent (within 6 months) title report, cost estimate(s) and plan check fees shall accompany all submittals for checking and approval by the City Engineer. The City Engineer shall accept plan check fees made payable to the City of Wheatland, based upon the cost estimate provided by the Design Engineer, with the explicit understanding that the plan check fees are subject to adjustment to be consistent with the final approved cost estimate for the project. Plans will not be approved until such time as final, adjusted plan check fees have been paid to the City of Wheatland.

In addition, the Design Engineer shall submit, together with the submittal package, a transmittal memo noting any and all items not included or addressed on the plans that would otherwise be required to make the plans complete.

Upon approval by the City Engineer, the Design Engineer shall submit the original plans to the City Engineer for signature by City Staff. Prior to submittal to the City Engineer, all necessary signatures except City Staff shall be complete. Upon signature by City Staff, the City Engineer shall arrange for duplicate mylars to be made of the plans. Upon payment of the direct cost of the duplicate mylars, the original plans will be returned to the Design Engineer.

APPROVED DRAWINGS ONLY shall be used by the construction forces, and no others will be allowed on the construction site.

IMPROVEMENT BONDS, when required, shall include a detailed cost estimate, prepared by the Design Engineer, and approved by the City Engineer.

AS-BUILT DRAWINGS shall be prepared by the Design Engineer to reflect the as-built conditions, and duplicate or photographic mylar copies, certified by the Design Engineer to be as-built drawings, shall be furnished to the City prior to final acceptance of the work by the City.

IMPROVEMENT PLANS - REQUIRED CONTENTS

Project Title

Project Design Credits:
- Designer's Signature
- Date
- Scale
- Project Approval Signature

Existing pertinent topography, (i.e., street, curb, gutters, storm drains, sanitary sewers, water and gas line, trees, creeks, drainage swales, and other features that will effect design, existing R/W, property lines, street names.)

Profiles of existing improvements and/or ground.

Location of proposed improvements:
- R/W, easements, etc.
- Horizontal control points (2 min.) with ties
- North arrow, contours
- A minimum of 2 benchmarks on City Datum with location, description, elevations.
- Project stationing (Reading left to right)
- Typical sections of work
- Cross-sections as required
- Profiles of all improvements
- Horizontal and Vertical Curves:
  - Begin Curve (B.C. & B.V.C. or P.V.C.)
  - End Curve (E.C. & E.V.C.)
  - Point of Intersection (P.I. & P.V.I.)
- Invert Station and Elevations:
  - All Structures
  - Gravity Pipelines

General Design Data
- Grades
- Lengths of design element
- Hydraulic gradient
- Energy gradient
- Other design data as required

Special Notes

References to City Public Works Construction Standards

Drawing Legend

SURVEY MONUMENTATION

SURVEY MONUMENT:

Placement, construction and recordation of survey monuments shall conform to applicable State regulations and codes as well as the accepted standards of the survey profession.

All monuments shall not be less substantial than a 3/4 inch diameter iron pipe or 5/8 inch diameter steel reinforcing bar, 18 inches long with a brass tag or plastic cap bearing the registration number of the engineer or surveyor who set the monument, and shall be subject to inspection and approval by the City Engineer. “Permanent” monuments shall be set in concrete. Before street improvements are accepted, all monuments disturbed by improvements shall be reset.

In making the survey for a subdivision, the engineer or surveyor shall set “permanent” monuments at all angle and curve points on the exterior boundaries of the subdivision, in all street intersections, at all angle points of street lines, and at all points of curvature, both simple and compound, of street lines. “Permanent” monuments at street intersections and at angle an curved points of street lines shall be set on street centerlines, unless otherwise directed by the City Engineer; provided however, that the “permanent” monuments need not be set at intervals of less than 400 feet.

The “permanent” monuments shall be set in the ground upright with the metal marker centered in the concrete, by excavating a 6 inch minimum diameter hole 2 feet below the finished grade and pouring the same full of concrete. When streets are required to be paved, the location of such monument and access thereto shall be given by a suitable concrete or cast-iron sliding sleeve surmounted by a circular cast-iron frame and lid at street surface. In case the monument is not a in a street, the metal marker may be set flush with the existing ground surface.

The engineer or surveyor shall set monuments at all lot corners and at all curve points on lot boundary lines.

There shall be one or more permanent bench marks for each subdivision, of a type approved by the City Engineer and referred to the City Datum, set at street intersections in the curb return or other location approved by the City Engineer. The bench mark shall be a brass disc 2 inches +/- in diameter, set in concrete.

STREET DESIGN CRITERIA

The design, layout, width, circulation, and other aspects of streets, both public and private, shall conform to the locations shown on the Circulation Element of the General Plan and approved by the City Engineer or City Planner.

The final improvement plans for streets shall show the survey monuments and rights-of-way referenced to existing property corners, width of paving, and all improvements, i.e., sanitary sewer system, storm drain system, concrete curb, concrete gutter. The widths and locations of adjacent streets shall be shown referenced to centerline stationing or monuments on the final improvement plans for streets.

STREET WIDTHS:

Class	Curb Width	R/W Width
Thoroughfares & Arterials		
2-Lane	40'	84'
4-Lane	64'	84'
Industrial streets	48'	84'
Collector streets	40'	60'
Local streets	37'	52'

The width of the roadway shall be measured normal to the centerline. Any exceptions to the above widths must be submitted to, and approved by the City Engineer.

Intersections of arterials, depending on estimated traffic volumes, may require special design. The need for single and double left turn pockets, free right turn lanes, right turn islands, raised medians, etc., shall be investigated.

Where feasible, when streets are improved for only one-half widths, the unimproved half shall drain away from the paved section and shall be provided with an adequate ditch.

Typical street cross-sections shall be based on 12-foot traffic lanes, and 8-foot parking lanes.

STREET GRADES:

Maximum street grades shall not exceed the following limits:

Arterial Streets	8%
Collector Streets	10%
Minor Streets	15%

STREET DESIGN CRITERIA

Minimum street grades shall not be less than 0.30% unless authorized by the City Engineer.

The gradient of a street entering an intersection shall not be more than 5% at the intersection.

Vertical curves are required when grade breaks exceed 1.0%. Vertical curves shall be made with parabolic vertical curves determined by minimum stopping sight distance and good engineering practice established by the City Engineer.

STREET IMPROVEMENTS:

Vertical concrete curbs and gutters shall conform to these Public Works Construction Standards. The minimum grade for curbs and gutters shall be 0.30% unless a reduction is authorized by the City Engineer. Minimum grade for curbs and gutters around intersection returns shall be 0.50%, while minimum grade for curbs and gutter in cul-de-sac bulbs shall be 0.35%.

Vertical curb shall be required at all intersection returns. A five-foot transition to rolled curb and gutter shall be provided.

Street improvement plans shall show curb and gutter profiles, including profiles for all curb returns and any approved cul-de-sacs.

Concrete sidewalk shall conform to the City Public Works Construction Standards, 4-feet wide in residential areas, 5-feet wide in commercial and industrial areas exclusive of curbs, and no less than four inches thickness for public and private sidewalks, and six inches thickness for driveways.

Concrete sidewalks shall be adjacent and contiguous in design and construction to curbs and gutters unless a non-contiguous parkway sidewalk is specifically approved, and shall have expansion joints at 20-feet maximum spacing, as required for the curb and gutter. Wherever non-contiguous parkway sidewalk is allowed, root barriers will be required at all parkway trees.

Curb returns shall be constructed on a curve having a radius equal to that shown below:

Class	(Min.) Curb Return Radius
All Residential Street Intersections	30'
Cul-de-sac	40'
Arterial Street Intersections	30'

STREET DESIGN CRITERIA

STREET IMPROVEMENTS:

Tops of curbs and lips of gutters shall be straight and uniform, and within 1/8" of a 10-foot long straightedge at all locations on straight sections.

The stringent alignment and grade control necessary for minimum grades require special attention during construction of curb and gutter by mechanical extrusion machine. Grade and alignment shall be properly maintained at all times. Immediately prior to pouring curb and gutter by mechanical extrusion machine, the Contractor shall have the grade control stringline certified by an Engineer or Surveyor.

Any curb and gutter which fails to meet the alignment and grade requirements shall be removed and replaced at no cost to the City.

SIDEWALK REQUIREMENTS:

Construction of curb, gutter and sidewalk along existing city streets may be required as a condition of building or use permit approval, or site plan review approval. In such cases, the permittee shall have improvement plans prepared by an Engineer which will provide ultimate design grades for street improvements in the surrounding area adequate to demonstrate the feasibility of grades for improvements to be constructed.

In areas where immediate construction of curb, gutter and sidewalk are not feasible in the opinion of the City Engineer, a deferred improvement agreement may be entered into by the owner of the parcel. The agreement shall obligate the owner to participate on a 50/50 basis with the City in the engineering design and construction of curb, gutter, sidewalk, driveway (if applicable), and any other necessary improvements along the parcel frontage, at such time as the City initiates construction of these improvements. This agreement shall be binding upon, inure to the benefit of, and be enforceable by, the parties thereto and their successors and assigns.

DRIVEWAY STANDARDS AND CRITERIA:

DRIVEWAYS - GENERAL: All driveway approaches in City right-of-way shall be constructed in conformance with these Public Works Construction Standards or as modified for special situations described herein.

1. A residential driveway apron shall be constructed between the curb and the property line with Portland cement concrete per driveway standards.
2. A commercial driveway apron to a parking lot or "drive-in" business shall be constructed between the curb and the property line with Portland cement concrete, per driveway standards.

3. An industrial driveway apron shall be constructed between the curb and the property line with an approved Portland cement concrete structural section based on the amount of truck traffic (TI) and ability of the soil (R-value) to withstand truck wheel loads.
4. In all cases, it shall be the responsibility of the abutting property owner to maintain the driveway apron in a sage and suitable condition for the traffic to be carried, whether pedestrian or vehicular.

COMMERCIAL – INDUSTRIAL HIGH VOLUME DRIVEWAYS: Commercial and industrial driveways that serve a substantial number of vehicles or trucks shall have dimensions, sight distance, geometrics, spacing, etc., determined by the City Engineer.

ONE-WAY DRIVEWAYS: One-way entrance or exit driveways shall conform to these Public Works Construction Standards for commercial driveways or as modified by the City Engineer for special situations.

AMOUNT OF FRONTAGE ALLOWED FOR DRIVEWAYS: Not more than 60 percent of the frontage of any parcel may be devoted to driveways.

STREET DESIGN CRITERIA

DRIVEWAY WIDTH "W": The width of driveways shall be measured as bottom width, or that dimension between the start of the transition to full curb height.

MINIMUM WIDTH "W":

1. The minimum width of driveways for one and two family residences shall provide for a bottom width of 12 feet, exclusive of the transition to full curb height at both ends.
2. The minimum width of all other driveways shall provide for the safe, efficient, and economical movement of traffic and should be approximately 24 feet, exclusive of the transition to full curb height at both ends .

MAXIMUM WIDTH "W":

1. The maximum width of driveways for one and two family residences shall provide for a bottom width of 24 feet, exclusive of the transition to full curb height at both ends.
2. The maximum width of all commercial driveways shall be 35 feet, exclusive of the transition to full curb height at both ends, except this may be increased by the City Engineer where necessary to provide for the safe, efficient, and economical movement of traffic.
3. In the case of a driveway located adjacent to an alley, if approved by the City Engineer, the driveway apron may be combined with the alley but the total combined width shall not exceed 40 feet.
4. The driveway width may be modified by the City Engineer to facilitate turning movements where curb lanes are used.

STREET DESIGN CRITERIA

DISTANCE BETWEEN DRIVEWAYS:

1. The minimum length of full height curb between a driveway and a side property line shall be 3 feet.
2. The minimum length of full height curb between driveways on adjacent lots shall be six feet unless specific approval of a shorter length is given by the City Engineer.
3. No driveway shall be located closer than six feet from an existing or future alley entrance except as provided elsewhere in these standards.
4. Where two or more driveways are constructed on the same lot, the minimum length of full height curb between driveways shall be 24 feet. Where practical to provide parking, the total length of full height curb between driveways shall be in multiples of 22 feet.

DRIVEWAY GRADE (SLOPE): The maximum grade for driveways shall be limited to 12.5%. Eight percent is a desirable maximum for commercial-industrial driveways.

DRIVEWAY DISTANCES FROM UTILITY OR SAFETY DEVICES: No driveway shall be located closer than five feet from a fire hydrant, traffic signal, street light standard, utility pole, or guy wire.

UTILITY RELOCATION: Relocation of utility company's facilities or other public improvements to accommodate a driveway shall be accomplished without cost to the City.

SIGNAL AND ELECTRICAL CONDUIT: Where traffic signal or highway lighting is planned or anticipated, a minimum of one 2-inch PVC-P&C TC-6 conduit shall be placed under any new driveway apron and extend a minimum of one foot beyond the ends of the driveway. The conduit shall be placed behind, and a minimum of 24 inches below, the top of curb.

REMOVAL OF EXISTING DRIVEWAYS: When driveway construction is to take place on a parcel, any abandoned driveways shall be removed and replaced with standard curb, gutter, and sidewalk concurrently with the new construction and without cost to the City.

MODIFICATION: The above standards may be modified by the City Engineer for hardship conditions or where necessary to provide for the safe and efficient movement of traffic.

INTERSECTIONS:

Class	Tangent Distance Required at Street Intersections
Local Street	50'
Collector Street	100'
Arterial Street	Require Special Design

STREET DESIGN CRITERIA

Deviation from the above design standards shall be approved by the City Engineer.

The centerline of streets entering upon opposite sides of any given street shall normally align, or shall be offset by at least 200 feet for local residential streets and 300 feet for all other streets. Local streets shall normally be designed as "T" type intersections.

Cul-De-Sacs: Dead-end streets shall terminate in a paved turn-around and shall have a 40-foot minimum curb line radius at the turn-around. Cul-de-sacs shall not exceed 500 feet in length, measured from the centerline of the intersecting street to the center of the cul-de-sac "bulb".

HORIZONTAL CURVES:

The radius of curvature in the centerline of the street shall be not less than:

Arterial Streets	650'
Collector Streets	200'
Minor Streets	75'

Superelevation Rate: -2% from the center line towards the right-of-way line shall be typical cross slope. Deviation from the typical superelevation rate shall be considered due to gutter drainage run-off, horizontal curve requirements, etc.

STRUCTURAL SECTION:

Structural design of pavement, which includes the structural section to be used, shall be based on soil tests results, the TI (Traffic Index), and standard gravel equivalent calculations according to good engineering practice and shall be approved by the City Engineer.

Slopes: Earth slopes in cut or embankment sections shall not be steeper than one and one-half-feet horizontal to one-foot vertical, unless steeper slopes have been approved by the City Engineer and are based on a soils report.

COMPACTION DENSITY REQUIREMENTS IN STREETS

To clarify City requirements for the compaction of street subgrade and base materials, the following criteria shall apply:

Maximum Density - Optimum moisture relationships (compaction tests), will be determined in accordance with ASTM D 1557, Method C.

Subgrade shall be:

Compacted to a relative compaction of 92 percent for all soil material (cohesive, non-free draining material).

Compacted to a relative compaction of 95 percent for all granular material (non-cohesive, free draining material).

Aggregate base shall be compacted to 95 percent relative compaction.

Asphalt concrete pavement shall be compacted to 95 percent relative compaction (ASTM D 1188 Test Method).

Class A or B backfill for trenches shall be compacted to 95 percent relative compaction.

Class C backfill for trenches shall be compacted to 92 percent relative compaction.

Compaction test results will be acceptable as meeting the 95 percent requirement if the average of all tests is 95 percent with no individual test lower than 93 percent.

Compaction tests will be acceptable as meeting the 92 percent requirement if the average of all tests is 92 percent with no individual test lower than 90 percent.

GENERAL UNDERGROUND REQUIREMENTS

UNDERGROUND SERVICE ALERT (U.S.A.) shall be notified by any Contractor contemplating underground construction or potholing, minimum 72 hours prior to the start of construction. The Underground Service Alert phone number is (1-800-642-2444).

Cal-OSHA underground excavation permit and any and all other safety requirements shall be the sole responsibility of the Contractor. Upon request, the Contractor shall demonstrate to the City's satisfaction, valid permits for any portion of the work.

WORKMAN'S COMPENSATION INSURANCE for the Contractor's forces shall be the sole responsibility of the Contractor. Prior to the start of any work, the Contractor shall demonstrate adequate Workman's Compensation Insurance to the satisfaction of the City.

WATER SYSTEM DESIGN CRITERIA

PIPE MATERIALS FOR MAINS:
Ductile Iron Pipe
PVC Pipe - AWWA C900 Cast Iron Dimensions

MINIMUM PIPE SIZES FOR MAINS:
6" for looped mains and interconnections
8" for unlooped mains
10" for transmission mains between wells

VALVES shall be resilient wedge gate valves installed in accordance with the standard details. A sufficient number of valves shall be provided to permit isolation of each main, not more than 600 feet in length.

FIRE HYDRANTS shall be dry barrel hydrants, Waterous Pacer WB-67 located as directed by the Fire Chief, and not more than 400 feet apart. Hydrant installation shall be in accordance with the City Standard Details.

SERVICES shall be installed in accordance with the Standard Details. All water services shall be single services, 1" minimum diameter. Backflow prevention devices shall be installed on all services to property with access to water from a private well or separate water service, and on all services to properties with potential contamination sources, as determined by the City Engineer and/or the California State Department of Health Services.

MINIMUM COVER for water mains shall be 30 inches, with 36 inches of cover desirable whenever possible.

LOCATOR WIRE shall be installed with all non-metallic water pipelines, per Standard Drawings.

CROSS-CONNECTION CONTROL ON FIRE SPRINKLER SYSTEMS:
Considerable confusion has arisen regarding the intent and purpose of AB 2503, Chapter 425, Statutes of 1982, which adds Section 13114.7 to the Health and Safety Code. Any regulations implementing the provisions of Section 13114.7 of the Health and Safety Code must be promulgated or approved by the State Fire Marshal in accordance with Section 11342.3 of the Government Code.

Section 13114.7 makes it clear that no backflow prevention devices other than those specified in the Standards of the National Fire Protection Association (NFPA) may be required for Class I and II fire sprinkler systems. Class I automatic fire sprinkler systems are those systems supplied by public water mains only (i.e., no pumps, tanks or reservoirs, physical connection from other water supplies, and no anti-freeze or other additives of any kind).

Class II systems are the same except that booster pumps, whose sole source of supply is the public water system, may be installed in the connection from the street main.

WATER SYSTEM DESIGN CRITERIA

Automatic fire sprinkler systems which have cross-connections to unapproved sources of water, in addition to being connected to the public water mains. shall have backflow protection as required by American Water Works Association M-14 for Class III, IV, V, and VI fire systems.

All automatic fire sprinkler systems shall be installed in accordance with provisions of NFPA #13, "Installation of Sprinkler Systems". All systems shall have a fire department connection as required by NFPA #13, unless waived by the Fire Chief. All Class I and II automatic fire sprinkler systems, as with all fire extinguishing systems, shall be serviced and maintained on a regular basis in accordance with the provisions of Chapter 1.8 (starting with Section 13195) of Part 2 of Division 12 of the Health and Safety Code.

In accordance with NFPA #13, each automatic fire sprinkler system shall have an alarm check valve, or equivalent, which is listed and approved for fire system use. Each fire department connection shall have a listed check valve as required by NFPA #13. Further, the fire department connection shall be attached to the sprinkler system above the alarm check valve assembly and not on the supply side. Class I and II systems connected to public mains only do not require double backflow protection devices. Since Class I and II systems are located on public water mains and fire hydrants, the public mains shall be used for supplementary water except in cases of extreme emergency situations where a fire progresses beyond the design criteria of the system and additional water, either in volume or pressure, is required to control the fire situation.

When such added water is needed, it shall be taken from fire hydrants on the public mains through the appropriate fire department pumper and hose lines. The connection shall not be used to pump water from any source other than the public water system.

Connections to the existing water system shall be made only at locations approved by the City Engineer. A gate valve shall be provided at the point of connection to isolate the new water mains from the existing system. All work related to the connection shall be done by the Contractor with full-time inspection by the Department of Public Works.

Hot tap connections shall be avoided, if possible, and will not be allowed on existing steel pipelines, nor when the diameter of the service line is greater than 2/3 of the diameter of the main. If hot tapping is approved by the City Engineer, the Contractor shall have the tapping sleeve and valve fully installed, thrust blocked, supported, and approved by the City prior to making the hot tap.

WATER SYSTEM DESIGN CRITERIA

HYDROSTATIC TESTS:

All parts of the entire pipeline installation shall be tested at 100 psi minimum pressure, or a pressure of 50 psi above the maximum working pressure. Tests shall be made in the presence of the City Engineer or his representative.

Before the test, the pipeline shall be sufficiently anchored to withstand the test pressure. During the filling of the line with water, precautions shall be taken to prevent air pockets at high points. Water may be allowed to stand in the line for several hours prior to the test. During the test, which shall be conducted for the time period determined by the City Engineer, but not less that two (2) hours, the leakage shall not exceed 5 gallons per 24 hours per thousand feet of pipe per inch of nominal diameter. Test sections shall be as short as valve configurations permit. If any valved section of pipe shows greater leakage than specified, the Contractor shall locate and repair the leaks and shall retest that section of line at no additional cost to the Owner.

FLUSHING AND STERILIZATION OF COMPLETED MAINS:

In general, the methods outlined in AWWA C601 entitled, "Disinfecting Water Mains," should be used as a guide in performing this operation where applicable.

Preliminary flushing of completed lines prior to chlorination shall be accomplished as thoroughly as possible with the water pressure and outlets available. The flushing shall be done after the pressure tests have been made.

Before being placed in service, the entire line shall be chlorinated. Chlorine shall be applied by one of the following methods: Liquid chlorine, gas-water mixture, fed-chlorine gas, or calcium hypochlorite water mixture, unless another method (such as Chlorine "HTH" Tablets) is approved by the City Engineer. The chlorinating agent shall be applied at the beginning of each section adjacent to the feeder connection and shall be injected through a corporation cock, hydrant, or other connection ensuring treatment of the entire line.

Water shall be fed slowly into the line with chlorine applied in amounts to produce a dosage of 40-50 parts per million. Portions of the existing mains which have been connected to a new line or otherwise contaminated by construction shall be included in the system sterilized. A residual of not less than 10 parts per million after 24 hours shall be produced in all parts of the line. During the chlorination process, all valves shall be operated.

If disinfection by chlorine "HTH" tablets is permitted by the City Engineer, the tablets shall be secured to the top of the pipe with an approved adhesive. After chlorination, the water shall be flushed from the lines at the extremities until the replacement water tests are equal, chemically and bacteriologically, to those of the permanent water supply.

SANITARY SEWER DESIGN CRITERIA

MAIN LINE SEWERS:

Minimum pipe size shall be 8", except that 6" may be used in the last run in residential areas within cul-de-sacs where no future extension of the main are anticipated.

Pipe material shall be polyvinyl chloride, or ductile cast iron.

Joints shall be approved ASTM standard flexible gasketed joints for the pipe material used.

Locator wire shall be installed with all non-metallic force mains as shown in Standard Drawings.

Design calculations shall be submitted to verify line size and bedding design, as well as Class or Type of pipe.

Manning "N" values to be used:

PVC	N = 0.010
DIP	N = 0.012

All dead ends shall have a Standard Rodhole not more than 200 feet from a manhole.

Minimum slopes shall be selected to maintain a minimum velocity of 2 FPS, with the pipe flowing full.

DESIGN FLOW CRITERIA:

Domestic: In residential areas, use 250 gallons per day per "equivalent household unit" for average daily flow. Maximum domestic flows should be based on the ratio of peak to average flows as determined by using a Peak Factor of:

$$PF = 2.80 \times Q^{(-0.155)} \qquad \text{(Q in MGD)}$$

$$PF = 7.72 \times Q^{(-0.155)} \qquad \text{(Q in GPM)}$$

Design flows shall be the peak domestic flows plus 200 gallons per acre per day allowance for stormwater inflow and groundwater infiltration.

PIPELINE WATERTIGHTNESS TESTING: Tests for watertightness shall be made in the presence of the City Engineer or his representative. The Contractor shall furnish all labor, materials, tools, and equipment required to make the tests. Prior to completion of watertightness testing, all pipes shall be balled, flushed, and mandrelled (flexible pipe material only). No testing for final acceptance of the pipeline will be done until the trench has been fully backfilled and acceptably compacted to finish grade or pavement subgrade.

SANITARY SEWER DESIGN CRITERIA

All sections of pipe shall be tested, and tests shall be made from manhole to manhole. The sewer shall be complete with laterals, if any. Exfiltration tests shall be made with air except where the use of water is approved by the City Engineer. Air shall be slowl, supplied to the plugged pipeline installation until the internal air pressure reaches 4.0 p.s.i. greater than the average back pressure of any groundwater that may submerge the pipe. At least two minutes shall be allowed for temperature stabilization. The rate of air loss shall then be determined by measuring the time required for the internal pressure to decrease from 3.0 p.s.i. to 2.5 p.s.i. greater than the average backpressure of any groundwater that may submerge the pipe. Pipelines shall be considered acceptable when the time required for the 0.5 p.s.i. pressure drop is greater than:

PVC or DIP at 0.0010 cubic feet per minute per square foot of internal pipe surface;
Test Time (secs.) = 36.3 x Pipe Diameter in inches.

Testing with water may be requested by the Contractor. If approved by the City Engineer, the test shall be performed from manhole to manhole by plugging the sewer pipe at the down-stream manhole and filling the pipe to a level 5-feet above the top of the pipe at the upper manhole, or 5-feet above the groundwater level, whichever is greater. The rate of leakage shall be determined by measuring the amount of water required to maintain the water level at the upper manhole. The test shall be conducted for a period of at least two hours. The City Engineer may, at his discretion, require a longer test period. Leakage shall not be in excess of the rate of 20 gallons per inch of pipe diameter per 1,000 lineal feet of pipe per day.

MANHOLES:

Manholes are required:

At changes of slope.

At changes of pipe size.

At changes of direction unless the design, as approved by the City Engineer, allows for large radius curves.

SANITARY SEWER DESIGN CRITERIA

Intersections of mains.

Maximum spacing of 400 feet.

Ends of lines more than 200 feet in length.

All manholes shall be numbered on the plans.

All manholes shall be tested for leakage by filling with water. Leakage shall not be greater than 0.15 gallons per day per square foot of interior surface area. All visible leaks shall be repaired.

SEWER LATERALS:

Pipe Materials:
- PVC
- ABS
- Ductile Iron Pipe

Size:
Minimum 4" diameter. Larger diameter laterals may be required by the City Engineer.

Depth:
- 3' minimum at property line
- 1' minimum at building service

Slope:
2% preferred, 1% minimum if approved by the City Engineer or Director of Public Works.

Slope designed by Registered Civil Engineer and approved by the City Engineer.

Connections:
All connections shall be made in a method approved and inspected by the City Department of Public Works.

Calder couplings shall not be used unless specifically approved by the Director of Public Works or the City Engineer.

STORM DRAIN DESIGN CRITERIA

GENERAL:

Design calculations and flow maps for all tributary areas shall be submitted in duplicate with improvement plans.

Topographic maps shall have adequate ground elevations and/or contours (maximum interval - 1 foot), adequate to define boundaries and slope of drainage basin.

Each drainage basin to be identified and correlated to calculations for that basin.

All data and calculations shall be complete and shall have reasonable clarity.

Diversions of all types shall be in strict accordance with applicable laws.

Placement of fills of any magnitude across an existing drainage course shall incorporate a means by which excess flows not handled by the design drainage system can flow overland via essentially the same course as prior to placing the fill across the drainage course without inundating or damaging any structure.

The following storm drain design criteria and charts shall be used with the rational formula for calculating hydrologic and pipe and/or channel design characteristics, ie., size, type, slope, velocities and entrance, and outlet structures, etc.

The use of onsite and offsite underground storm drain systems, in addition to standard curb and gutters, shall be required:

To limit inlet spacing to 500 feet maximum.

To eliminate valley gutters.

To eliminate a concentrated discharge of drainage into the street.

When the flow of water in the gutter, caused by storm water based on a 10-year storm design criteria, would extend more than eight feet from the face of curb or overtop the curb.

STORM DRAIN DESIGN CRITERIA

The use of valley gutters is not permitted.

Concentrated drainage shall not be discharged to City Streets unless specifically approved by the City Engineer.

DESIGN CRITERIA:

Traffic lanes shall not be inundated during a design frequency storm.

All existing streets shall be assumed to be constructed to ultimate standards.

All major drainage channels and natural streams shall be assumed to be constructed to ultimate standards.

Culverts shall be analyzed using a ponded (no velocity) condition upstream unless a definite channel exists or is proposed upstream. Inlet and outlet transition structures shall be provided to minimize entrance and exit losses.

Minimum size of proposed culverts shall be 15-inches in diameter.

Level of development as shown in the current City of Wheatland General Plan.

Recurrence Interval (Storm Frequency):

1. A frequency of ten years for areas less than forty acres and where the proposed drainage structure will not be placed in a natural or constructed sump. Culverts under moderate fills to pass a ten-year storm without static head, and under high fills to pass a 25-year storm with head; however, no damage due to ponding is to occur.
2. A 25-year frequency for areas larger than 40 acres and less than 160 acres. Culverts under moderate fills on collector and local streets are to pass a 25-year storm without static head, and under high fills to pass a 100-year storm with head; however, no damage due to ponding is to occur.

STORM DRAIN DESIGN CRITERIA

3. A 100-year frequency for areas larger than 160 acres, or where culverts are to be placed under high fills; where a sump condition exists and damage would result due to ponding and where major streets or a freeway are to be crossed. Culverts to pass 100-year storm with head; however, no damage due to ponding is to occur.

SUMMARY OF STORM FREQUENCY

Drainage Area (Acres)	Design Frequency	Culverts under moderate fills without head	Culverts under high fills with head
0-40	10 yr.	10 yr.	25 yr.
40-160	25 yr.	25 yr.	100 yr.
>160	100 yr.[1]	100 yr.	100 yr.

[1] All major streets or freeways, 100 years with head.

The minimum time of concentration shall be 10 minutes.

Vertical Alignment: Match soffits of different sized pipe (not flow lines).

Drop Inlets: Drop inlets shall be placed at return points upstream from the intersection whenever possible. Maximum spacing of drop inlets or manholes shall be 500 feet.

PIPE MATERIALS: The material for storm drain pipes shall be solid-wall PVC pipe with rubber gasket joints, reinforced concrete pipe with rubber gasket joints, or cast-in-place concrete pipe.

The use of cast-in-place concrete pipe shall be subject to the specific approval of the City Engineer.

Minimum pipe size is 12" diameter if the City is to maintain the pipe.

All storm drains should be designed for a minimum velocity of 2 feet per second, flowing full.

Precast pipes 24" or larger in diameter may be laid on a horizontal curve. The radius of curve shall not be less than 300' unless special pipes with longer lips are used.

D-Load criteria shall be used to design all pipes.

STORM DRAIN DESIGN CRITERIA

Precast R.C.P. is required in all roadway areas unless top of pipe is more than 36" below sub-grade.

For non-traffic areas (front yard, back yard, etc.) non-reinforced concrete pipe may be allowed.

Poured-in-place pipe cover requirements:

Depth from subgrade to top of pipe (Roadway Area)	Cover
0 - 12"	Not allowed.
12 - 36"	6" reinforced slab with 4" sand over pipe.
36" or more	No special requirement.

Poured-in-place concrete pipe may be laid on a curve as follows:

Pipe I.D. (inches)	Minimum Radius (feet)
24"	50'
30"	50'
36"	50'
42"	65'
48"	80'
54"	100'
60"	120'
72"	130'

STORM DRAIN DESIGN CRITERIA

EXISTING IRRIGATION AND DRAINAGE CHANNELS:

Headwalls and wingwalls shall be provided at each end of pipes or box culverts to minimize entrance and exit losses, and cleanout access structures shall be provided at intervals of 1000 feet maximum.

The developer shall be responsible for all necessary downstream drainage improvements sufficient to carry the design flow for a 100-year frequency storm without inundating the building pads within the subdivision. Complete, detailed hydraulic calculations prepared by a registered civil engineer shall be submitted to demonstrate compliance with this requirement, and shall be subject to the approval of the City Engineer.

Roadway crossings of existing ditches shall be a reinforced concrete pipe, box culvert, or slab bridge with headwalls and wingwalls, sized to carry the design flow of the ditch, at the design grade of the ditch. All crossings shall be subject to the approval of the City Engineer.

RAINFALL INTENSITY, DURATION AND FREQUENCY

Rainfall intensity, duration and frequency curves shall be based upon historical information for the Wheatland USGS Gauge Station as contained in State Water Resources Bulletin No 195, Vol III.

CITY OF WHEATLAND
PUBLIC WORKS STANDARDS
TABLE OF CONTENTS - UPDATED AUGUST 2011

STREET STANDARD DETAILS	PAGE #
STANDARD DRAFTING SYMBOLS	ST-1
SURVEY MONUMENT	ST-2
TRENCH BEDDING AND BACKFILL	ST-3
TRENCH RESURFACING	ST-4
STREET SECTION TYPICAL UTILITY PLACEMENT	ST-5
ARTERIAL STREET	ST-6
INDUSTRIAL STREET	ST-7
COLLECTOR STREET	ST-8
LOCAL STREET	ST-9
STANDARD STREET SECTION	ST-10
STANDARD 6" CURB AND GUTTER	ST-11
ROLLED CURB AND GUTTER	ST-12
VERTICAL CURB	ST-13
STANDARD SIDEWALK	ST-14
CURB RAMP DETAILS	ST-15
CURB RAMP AND ISLAND PASSAGEWAY DETAILS	ST-16
RESIDENTIAL / COMMERCIAL DRIVEWAY (ATTACHED WALK)	ST-17
RESIDENTIAL / COMMERCIAL DRIVEWAY (SEPARATE WALK)	ST-18
STANDARD CUL-DE-SAC	ST-19
TEMPORARY CUL-DE-SAC	ST-20
CURVE "KNUCKLE"	ST-21
STANDARD BARRICADE	ST-22
STREET NAME SIGN & INSTALLATION	ST-23
TREE AND WELL COVER	ST-24
MASTER TREE LIST	ST-25

WATER STANDARD DETAILS	PAGE #
WATER SERVICES	W-1
TAPPING SADDLE CONNECTION DETAIL (UP TO 2")	W-2
RESIDENTIAL WATER SERVICE (1")	W-3
RESIDENTIAL FIRE RISER DETAIL	W-4
RESIDENTIAL WATER SERVICE LOCATION	W-5
COMMERCIAL / INDUSTRIAL WATER SERVICE (1")	W-6
COMMERCIAL WATER SERVICE (1 1/2", 2")	W-7
IRRIGATION WATER SERVICE (1-1/2", 2")	W-8
TYPICAL THRUST BLOCKS AND ANCHOR DETAILS	W-9
LOCATING WIRE FOR NONMETALLIC PIPELINES	W-10
VALVE COVER INSTALLATION	W-11
2" BLOW OFF VALVE	W-12
COMBINATION AIR / VACUUM 1" RELEASE VALVE	W-13
WATER SAMPLING STATION	W-14
FIRE HYDRANT INSTALLATION	W-15

CITY OF WHEATLAND
PUBLIC WORKS STANDARDS
TABLE OF CONTENTS (CONTINUED) - UPDATED AUGUST 2011

SANITARY SEWER STANDARD DETAILS	PAGE #
TYPICAL SEWER LATERAL DETAILS	SS-1
STANDARD MANHOLE	SS-2
SHALLOW MANHOLE DETAIL (6" - 24" DIAMETER PIPE)	SS-3
STANDARD INSIDE DROP MANHOLE	SS-4
STANDARD SEWER SYSTEM DETAILS	SS-5
24" MANHOLE FRAME & COVER ASSEMBLY	SS-6
DETAIL OF 6" RODHOLE INSTALLATION	SS-7
SEWER TEE DETAIL	SS-8
MANHOLE BACKFILL DETAIL	SS-9

STORM DRAINAGE STANDARD DETAILS	PAGE #
ALLEY VALLEY GUTTER	SD-1
STANDARD DRIVEWAY CULVERT	SD-2
DRIVEWAY APPROACH SWALE	SD-3
MINIMUM LOT GRADES	SD-4
INLET TRANSITIONS	SD-5
DRAIN INLET	SD-6
DROP INLET TYPE 2	SD-7
STANDARD HEADWALL STRUCTURAL DETAILS	SD-8
INTENSITY DURATION FREQUENCY CURVES	SD-9

PLAN SYMBOLS

RECOMMENDED LINE WEIGHTS

CITY LIMIT LINE	(3)
R/W OR PROPERTY LINE	(1)
CENTERLINE OF R/W	(00)
EDGE OF TRAVELED WAY	(00)
DRAINAGE DITCH	(000)
FENCE W/GATES	
RAILROAD TRACKS	
TOP OF SLOPE	(00)
TOE OF SLOPE	
BUILDING	
TIMBER BARRICADE	

	EXISTING	PROPOSED
SEWER LINE	S (000)	S (2)
WATER LINE	W (000)	W (2)
STORM DRAIN LINE	SD (000)	SD (2)
GAS LINE	G (000)	G (2)
ELECTRIC CONDUIT/CABLE	E (000)	E (2)
TELEPHONE CONDUIT/CABLE	T (000)	T (2)
TELEVISION CONDUIT/CABLE	TV (000)	TV (2)
ROLL CURB	(000)	(00)
VERTICAL CURB/GUTTER	(1) (000)	(1) (000)
COMMERCIAL DRIVEWAY		
RESIDENTIAL DRIVEWAY		
CATCH BASIN		
AREA DRAIN		
MANHOLE	(000)	(2)
RODHOLE	(000)	(2)
WATER VALVE	(000)	(2)
FIRE HYDRANT		
WATER METER	(000) DOUBLE / SINGLE	SINGLE (2)
REDUCER	(000)	(2)
BLOW-OFF	(000)	(2)

STREET NAME SIGN	
CENTERLINE MONUMENT	
BENCHMARK	
TREES	
BUSH, SHRUB	
HEDGE	
TRANSFORMER PAD	EXTG. / PROP.
ELEC. PULLBOX W/SERVICE	
POLE & GUY	
ELECTROLIER	
TRAFFIC SIGNALS	

PROFILE SYMBOLS

EXISTING GRADE	
ASPHALT CONCRETE (A.C.)	
AGGREGATE BASE (A.B.)	
CONCRETE	
SAND	
NATIVE GROUND	

NOTES:

1. STREET GRADES TO BE LABELED AS PERCENT, I.E. (2.00%).
2. PIPE GRADES TO BE LABELED AS SLOPE, I.E. (S=0.020).
3. PLACE PLAN/PROFILE DIRECTLY ABOVE ONE ANOTHER, MATCHING STATIONS.
4. STATIONS TO RUN LEFT TO RIGHT.
5. NORTH ARROWS SHALL POINT UPWARD OR TO THE LEFT.
6. NOTES ON EXISTING FACILITIES TO BE PLACED HORIZONTALLY
7. NOTES ON NEW CONSTRUCTION TO BE PLACED ON 45° ANGLE.
8. TITLE, PLAN, AND PROFILE SHEETS SHALL BE CITY STANDARD.
9. BENCH MARKS SHALL BE INDICATED.
10. ALL NEW CONCRETE WORK TO BE SHADED.

DATE: AUGUST 2011	DRAWN BY: WJK	APPROVED BY: DHS	SCALE: NONE

CITY OF WHEATLAND INC. 1874

DEPARTMENT OF PUBLIC WORKS

STANDARD DRAFTING SYMBOLS

ST-1

NOTE:
WHEN RESURFACING ROAD ADD RISER RING BETWEEN EXISTING BOX & COVER TO MEET NEW ROAD GRADE.

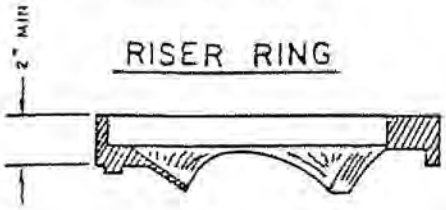

RISER RING

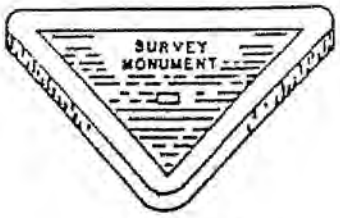

C.I. COVER

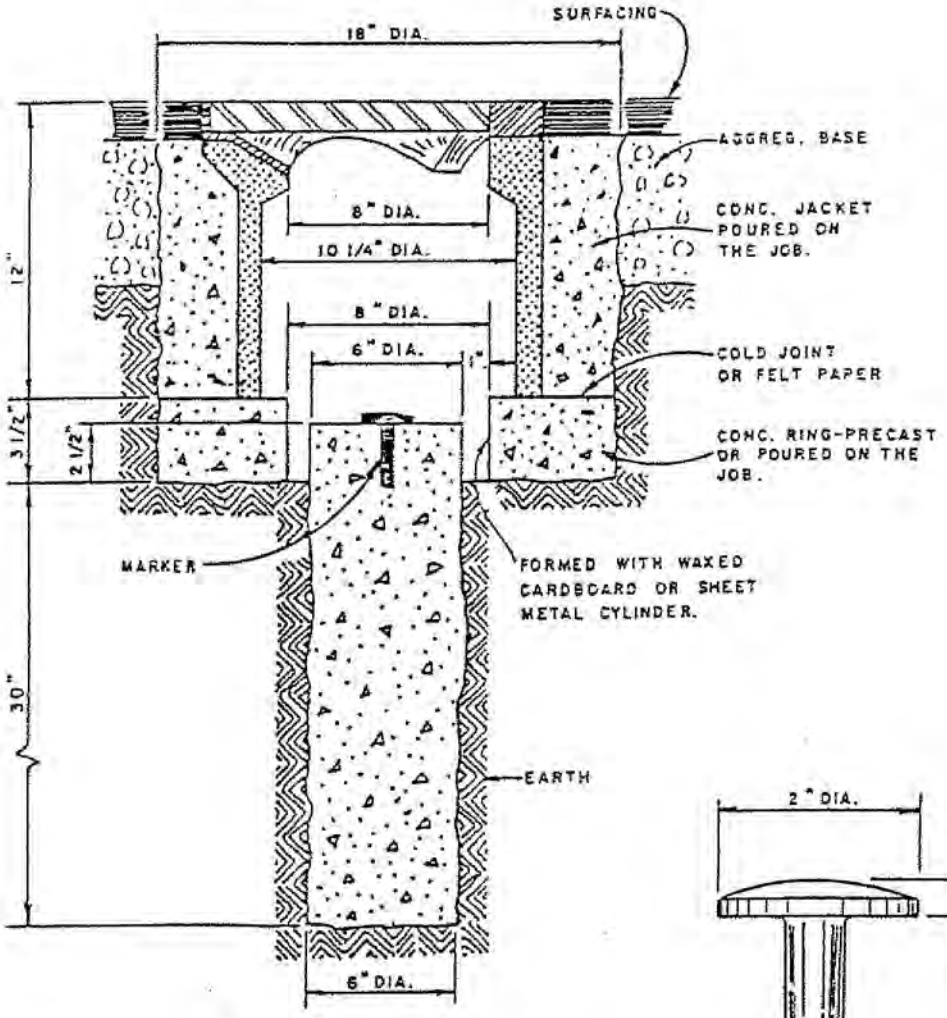

MONUMENT SECTION

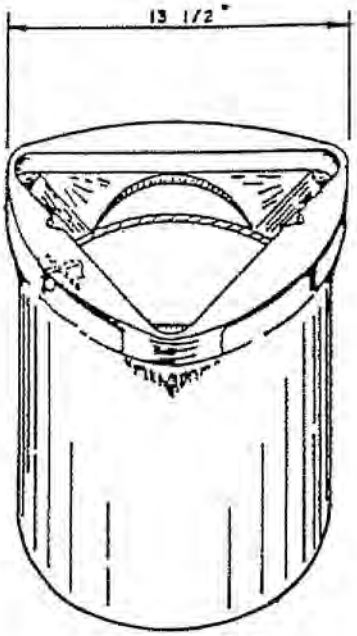

MONUMENT

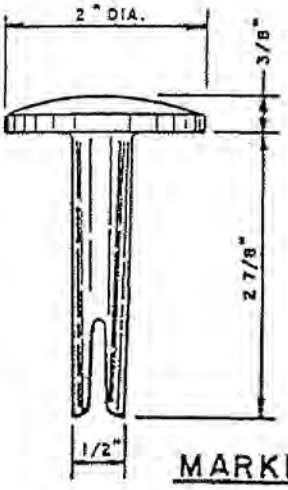

MARKER

NOTE:
MONUMENT TO BE NO. 4TT VALVE BOX W/C.I. FACE & COVER FOR TRAFFIC USE. BROOKS PRODUCTS INC. OR EQUAL.

DATE: AUGUST 2011	DRAWN BY: WJK	APPROVED BY: DHS	SCALE: NONE

CITY OF WHEATLAND INC. 1874 DEPARTMENT OF PUBLIC WORKS	SURVEY MONUMENT	ST-2

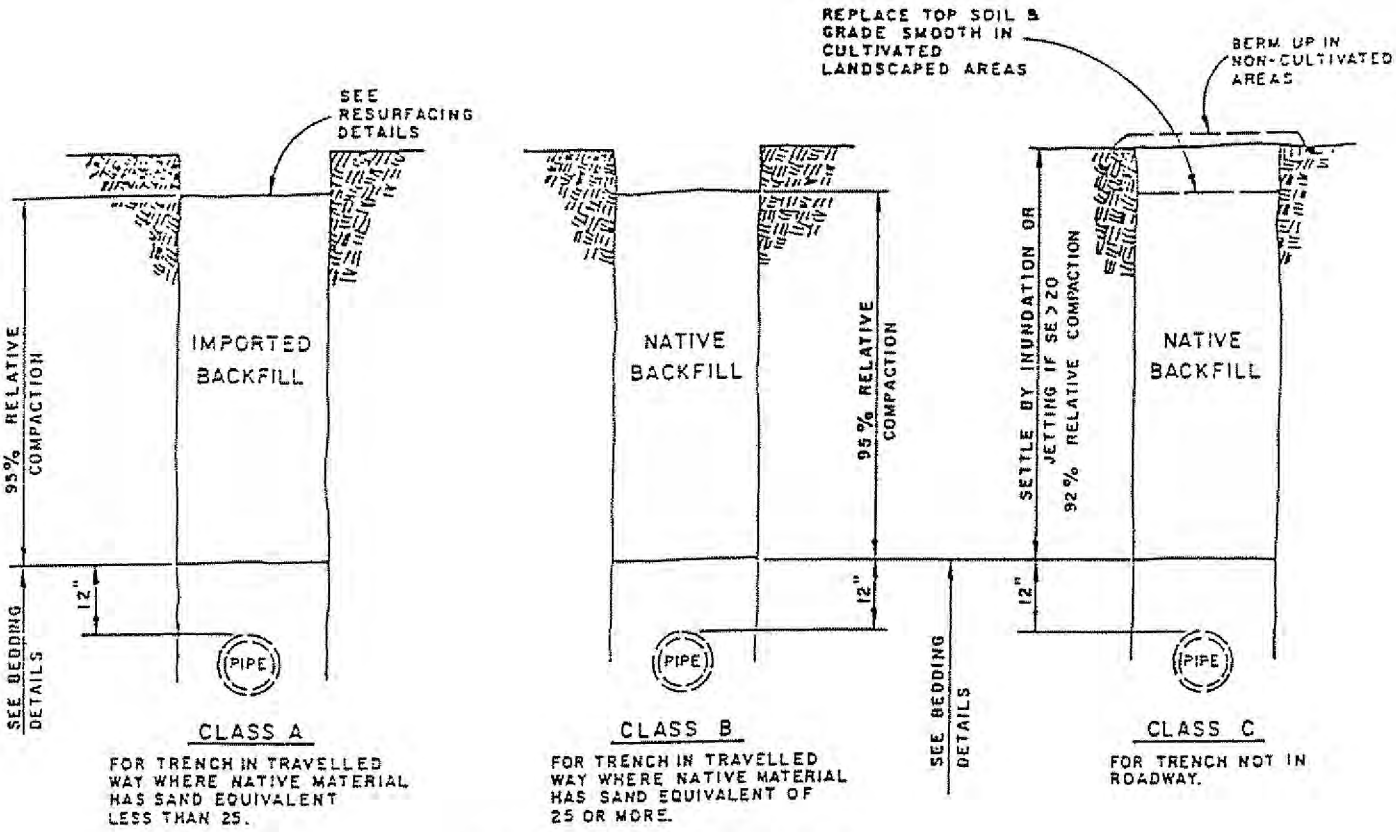

BACKFILL DETAILS

SCALE 3/8" = 1'-0"

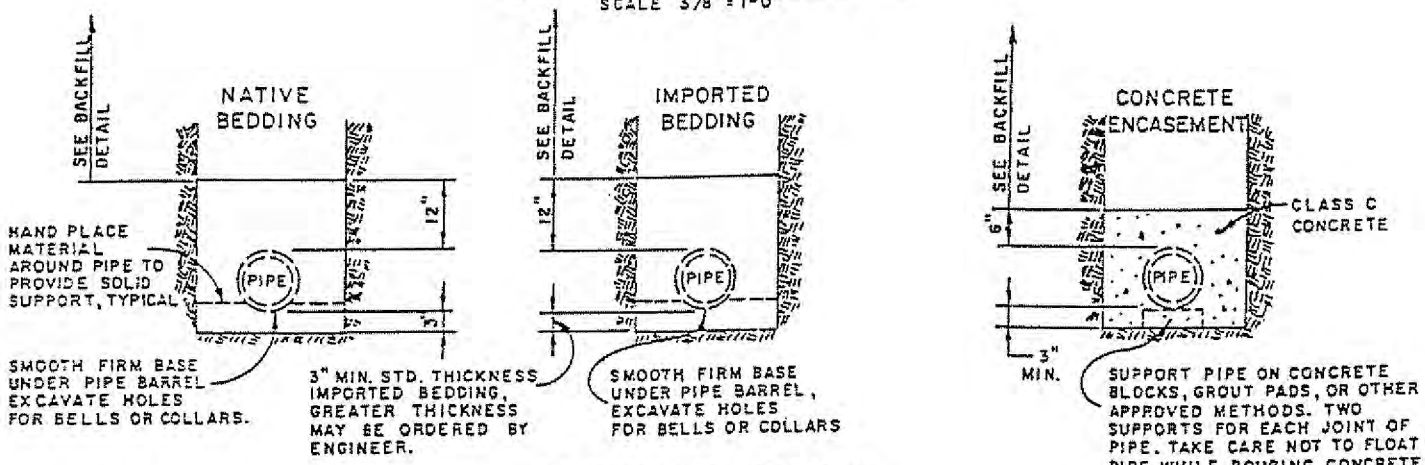

BEDDING DETAILS

SCALE: 3/8" = 1'-0"

NOTES:

1. IMPORTED BEDDING MATERIAL SHALL BE CLEAN SAND, OR 3/4" MAXIMUM GRAVEL UNIFORMLY GRADED WITH A MINIMUM SAND EQUIVALENT OF 25, OR CLASS 2 AGGREGATE BASE.
2. IMPORTED BACKFILL SHALL BE CLEAN SAND OR STREAM GRAVEL WHICH IS REASONABLY WELL GRADED FROM COARSE TO FINE WITH A MAXIMUM SIZE OF 1-1/2" AND NOT MORE THAN 10% PASSING A NO. 4 MESH SCREEN AND A MINIMUM SAND EQUIVALENT OF 25, OR CLASS 2 AGGREGATE BASE.
3. ALL BEDDING AND BACKFILL SHALL BE COMPACTED TO 95% RELATIVE COMPACTION.
4. NATIVE BEDDING MATERIAL SHALL HAVE A SAND EQUIVALENT OF 25 OR GREATER, AND SHALL BE 3/4" MAXIMUM SIZE.

DATE: AUGUST 2011	DRAWN BY: WJK	APPROVED BY: DHS	SCALE: NONE

CITY OF WHEATLAND INC. 1874 DEPARTMENT OF PUBLIC WORKS	TRENCH BEDDING AND BACKFILL	ST-3

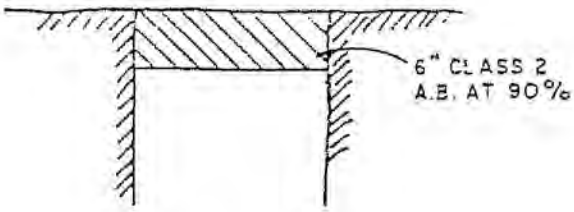

UNPAVED TRAVELLED WAYS

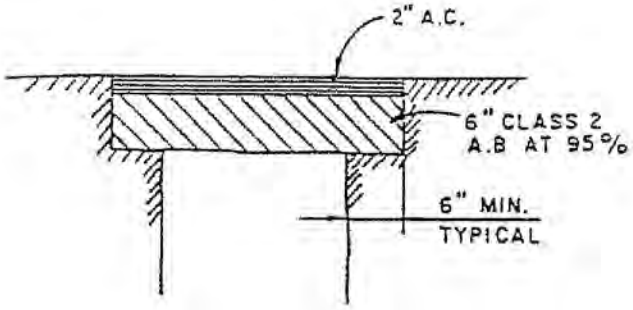

LOCAL STREET

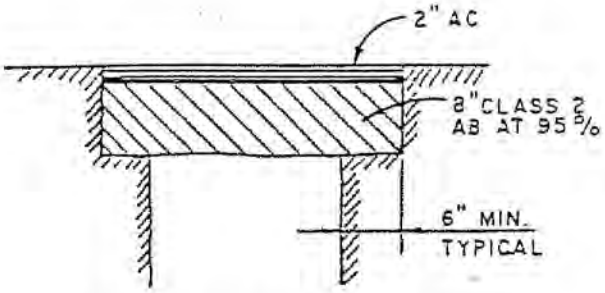

COLLECTOR STREET

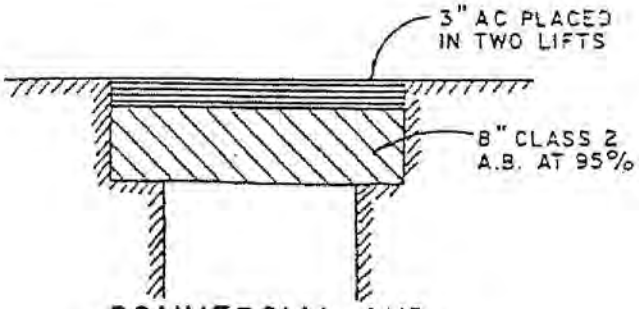

COMMERCIAL AND ARTERIAL STREETS

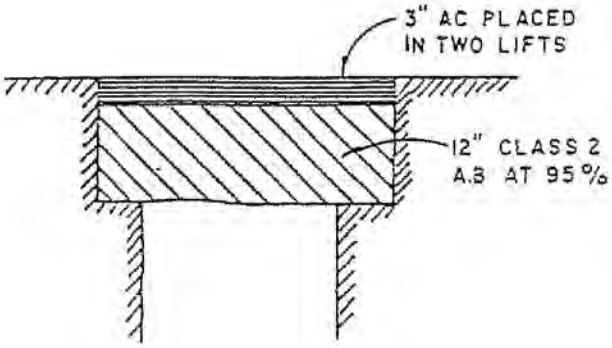

INDUSTRIAL STREETS

NOTES:

1. EXISTING PAVEMENT SHALL BE NEATLY CUT TO A STRAIGHT VERTICAL LINE.
2. AGGREGATE BASE SHALL BE PRIMED, AND EXISTING PAVEMENT EDGES SHALL RECEIVE A "TACK COAT" BEFORE PAVING.
3. ALL MATERIAL SHALL CONFORM TO THE CITY STANDARD SPECIFICATIONS.
4. ALL ASPHALT TRENCH PATCHES SHALL RECEIVE A FOG SEAL COAT OF SS-1 ASPHALTIC EMULSION.

DATE: AUGUST 2011	DRAWN BY: WJK	APPROVED BY: DHS	SCALE: NONE

CITY OF WHEATLAND INC. 1874 DEPARTMENT OF PUBLIC WORKS	TRENCH RESURFACING	ST-4

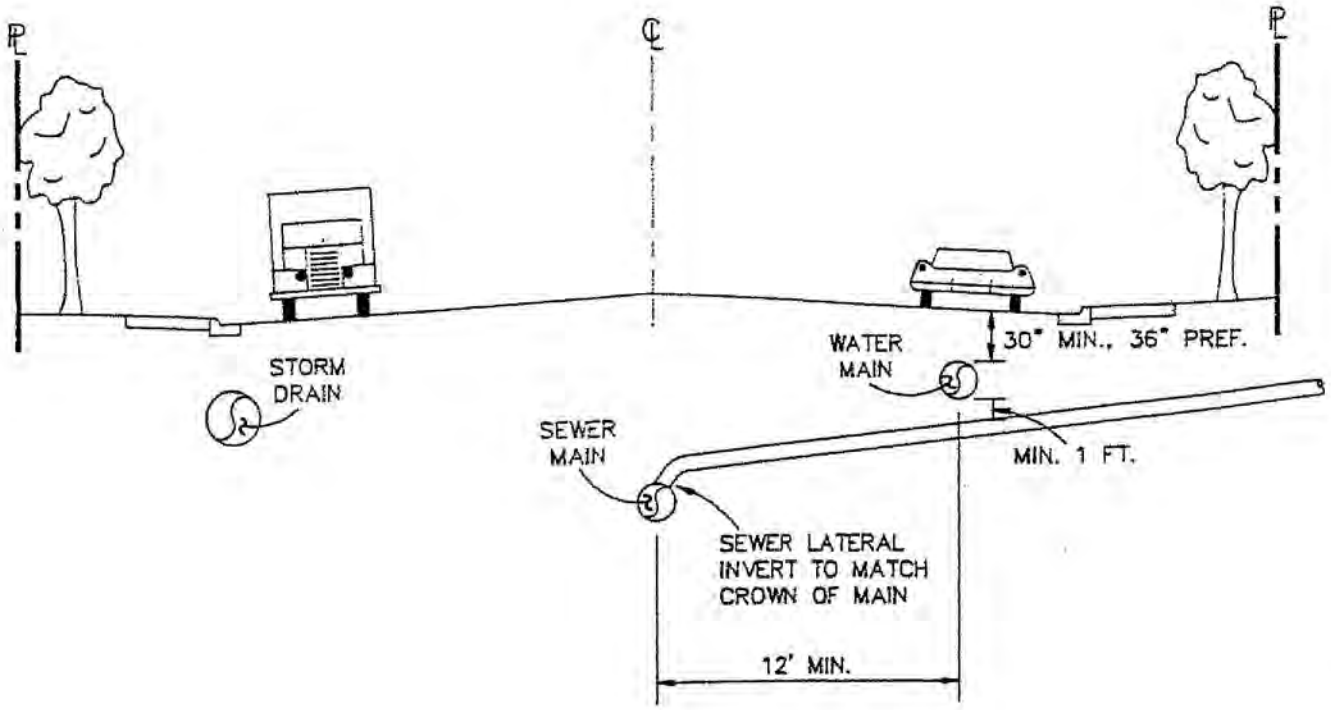

INSTALL SANITARY SEWER @ STREET ℄.

MAINTAIN 12 FT. SEPARATION BETWEEN WATER & SEWER MAIN.

MAINTAIN 12 IN. SEPARATION BELOW WATER MAIN & INTERSECTING SEWER MAIN OR LATERAL.

DATE: AUGUST 2011	DRAWN BY: WJK	APPROVED BY: DHS	SCALE: NONE

DEPARTMENT OF PUBLIC WORKS	STREET SECTION TYPICAL UTILITY PLACEMENT	ST-5

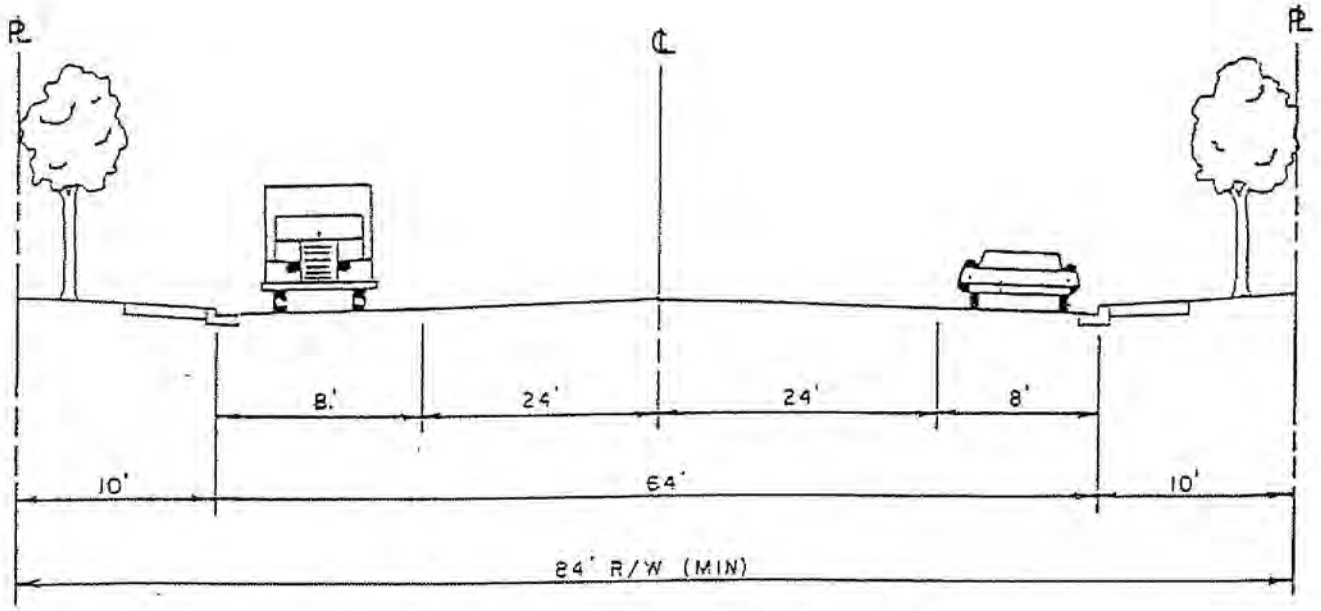

SYMMETRICAL ABOUT CENTER LINE

DEFINITION: — A STREET THAT SERVES A LARGE VOLUME OF VEHICULAR TRAFFIC WITH INTERSECTIONS AT GRADE AND GENERALLY HAVING DIRECT ACCESS TO ABUTTING PROPERTY, AND ON WHICH GEOMETRIC DESIGN AND TRAFFIC CONTROL MEASURES ARE USED TO EXPEDITE THE SAFE MOVEMENT OF THROUGH TRAFFIC.

ACCESS: — INTERSECTIONS AT GRADE WITH DIRECT ACCESS TO ABUTTING PROPERTY.

TRAFFIC FEATURES: — CHANNELIZATION USED TO CONTROL TURNING MOVEMENTS AT INTERSECTIONS AND AT CRITICAL DRIVEWAYS. TRAFFIC SIGNALS AT MAJOR INTERSECTIONS. PARKING AND DRIVEWAYS RESTRICTED AS NECESSARY.

STRUCTIONAL DESIGN SECTION
(MINIMUM)

AGGREGATE BASE — 0.67'
PRIME COAT — 0.25 GAL./SQ.YD.
ASPHALT CONCRETE — 0.25'
FOG SEAL — 0.10 GAL./SQ.YD.

DATE: AUGUST 2011	DRAWN BY: WJK	APPROVED BY: DHS	SCALE: NONE

CITY OF WHEATLAND INC. 1874 DEPARTMENT OF PUBLIC WORKS	ARTERIAL STREET	ST-6

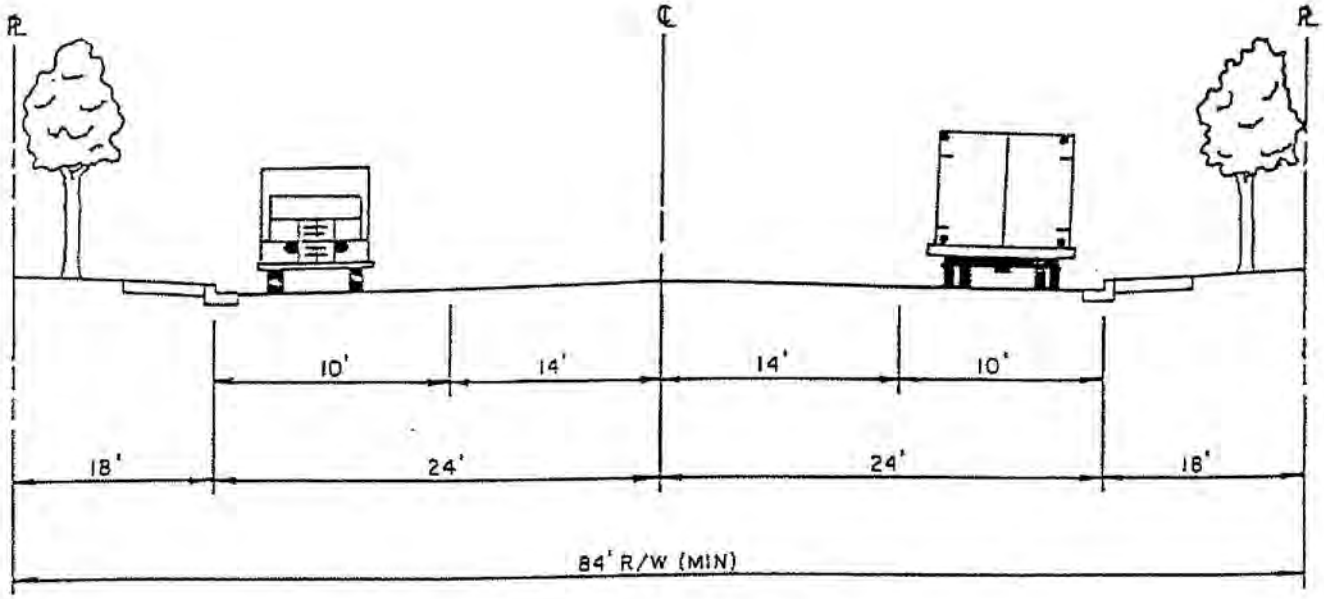

SYMMETRICAL ABOUT CENTER LINE

DEFINITION: — A STREET SERVING TRAFFIC WITHIN AN INDUSTRIAL DEVELOPMENT.

ACCESS: — INTERSECTIONS AT GRADE WITH DIRECT ACCESS TO ABUTTING PROPERTY.

TRAFFIC FEATURES: — TRAFFIC CONTROLS AND PARKING RESTRICTIONS AS WARRANTED.

STRUCTIONAL DESIGN SECTION
(MINIMUM)

AGGREGATE BASE — 1.00'
PRIME COAT — 0.25 GAL./SQ.YD.
ASPHALT CONCRETE — 0.25'
FOG SEAL — 0.10 GAL/SQ.YD.

DATE: AUGUST 2011	DRAWN BY: WJK	APPROVED BY: DHS	SCALE: NONE

CITY OF WHEATLAND INC. 1874 DEPARTMENT OF PUBLIC WORKS	INDUSTRIAL STREET	ST-7

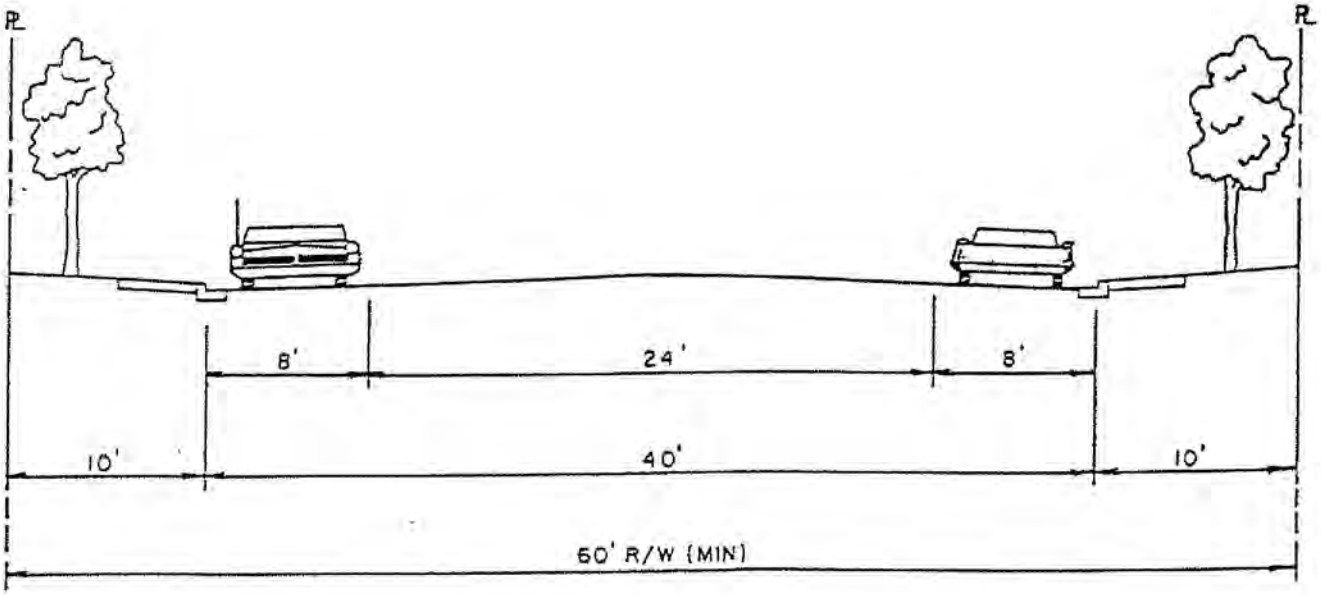

DEFINITION: A STREET THAT SERVES ABUTTING PROPERTY AND CARRIES TRAFFIC TO THE ARTERIALS.

ACCESS: INTERSECTIONS AT GRADE WITH DIRECT ACCESS TO ABUTTING PROPERTY.

TRAFFIC FEATURES: TRAFFIC SIGNALS, PARKING RESTRICTION AND OTHER CONTROL MEASURES AS WARRANTED.

STRUCTIONAL DESIGN SECTION
(MINIMUM)

AGGREGATE BASE — 0.67'
PRIME COAT — 0.25 GAL./SQ. YD.
ASPHALT CONCRETE — 0.17'
FOG SEAL — 0.10 GAL./SQ. YD.

DATE: AUGUST 2011	DRAWN BY: WJK	APPROVED BY: DHS	SCALE: NONE

CITY OF WHEATLAND INC. 1874 DEPARTMENT OF PUBLIC WORKS	COLLECTOR STREET	ST-8

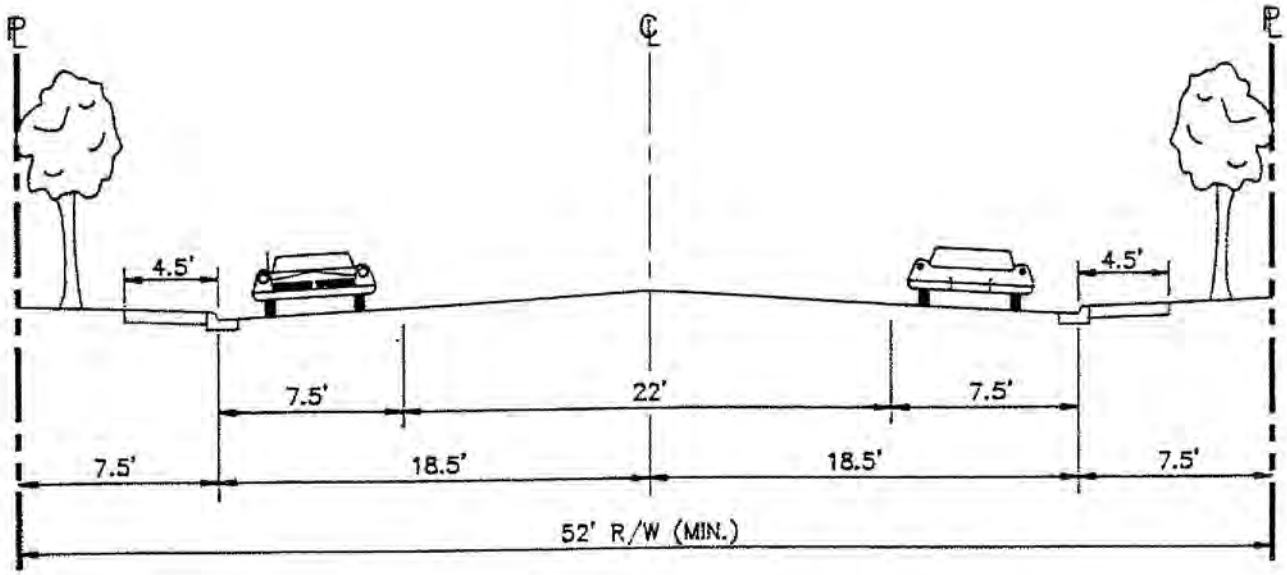

DEFINITION: A STREET THAT SERVES ABUTTING PROPERTY AND CARRIES TRAFFIC TO THE ARTERIALS.

ACCESS: INTERSECTIONS AT GRADE WITH DIRECT ACCESS TO ABUTTING PROPERTY.

TRAFFIC FEATURES: TRAFFIC SIGNAL, PARKING RESTRICTION AND OTHER CONTROL MEASURES AS WARRANTED.

STRUCTIONAL DESIGN SECTION
(MINIMUM)

AGGREGATE BASE -- 0.50'
PRIME COAT -- 0.25 GAL./SQ. YD.
ASPHALT CONCRETE -- 0.17'
FOG SEAL -- 0.10 GAL./SQ. YD.

DATE: AUGUST 2011	DRAWN BY: WJK	APPROVED BY: DHS	SCALE: NONE

CITY OF WHEATLAND INC. 1874 DEPARTMENT OF PUBLIC WORKS	LOCAL STREET	ST-9

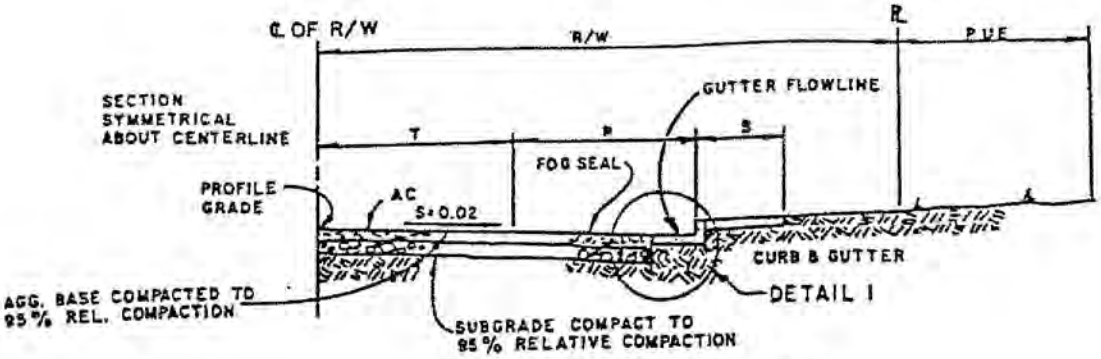

TYPICAL SECTION

SCALE: 1" = 10'

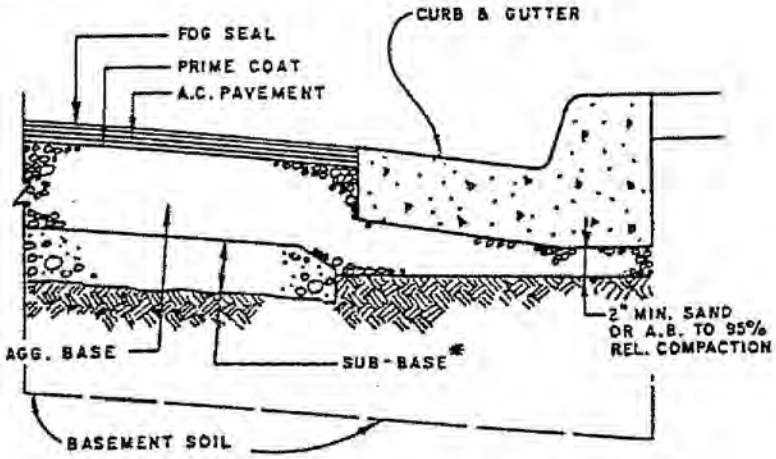

* SUB-BASE REQUIRED IF R-VALUE OF SUBGRADE SOIL IS LESS THAN VALUE SHOWN. THICKNESS TO BE DETERMINED BY THE DESIGN ENGINEER AND APPROVED BY THE DEPARTMENT OF PUBLIC WORKS.

DETAIL I

SCALE: 3/4" = 1'-0"

CROSS SECTION WIDTH & THICKNESS

TYPE OF STREET	R/W	T	P	S	A.C.(MIN.)	A.B. (MIN)	T.I.	R VALUE (MIN.)
LOCAL	52'	11'	7.5'	4.5'	0.17'	0.50'	4	23
COLLECTOR	60'	12'	8'	4.5'	0.17'	0.67'	5	27
ARTERIAL	84'	24'	8'	4.5'	0.25'	0.67'	5.5	22
COMMERCIAL	84'	12'	10'	4.5 OR 10'	0.25'	0.67'	6	31
INDUSTRIAL	84'	14'	10'	4.5'	0.25'	1.00'	7.5	33

LEGEND

R/W — RIGHT OF WAY. INCREASE IN "P" OR "T" FROM THE VALUES GIVEN IN THE ABOVE TABLE WILL REQUIRE A CORRESPONDING INCREASE IN R/W LESS THAN 84'.

T — TRAVELED WAY. ON OTHER THAN LOCAL STREETS, TRAFFIC VOLUME MAY DICTATE ADDITION OF A 16' MEDIAN B/OR 12 LANES.

P — PARKING LANE. SHOULD A BIKE LANE BE REQUIRED, PARKING WILL BE PROHIBITED.

S — SIDEWALK. A 9.5' SIDEWALK WILL BE REQUIRED ON COMMERCIAL STREETS DESIGNATED BY THE DEPT. OF PUBLIC WORKS AS "PEDESTRIAN ORIENTED."

PUE — PUBLIC UTILITY EASEMENT. 10' WIDE OR AS DETERMINED BY THE DEPT. OF PUBLIC WORKS.

A.C./A.B. — MINIMUM THICKNESSES SHOWN ARE REQUIRED WITHOUT SUB-BASE FOR SUBGRADES WITH AN R-VALUE EQUAL TO OR GREATER THAN THE VALUE SHOWN.

T.I. — TRAFFIC INDEX. CONSTANT USED IN THE DESIGN OF FLEXIBLE PAVEMENTS BASED ON THE ESTIMATED VOLUME OF TRUCK TRAFFIC. (ESAL PER CALTRANS DESIGN MANUAL).

DATE: AUGUST 2011	DRAWN BY: WJK	APPROVED BY: DHS	SCALE: NONE

CITY OF WHEATLAND INC. 1874

DEPARTMENT OF PUBLIC WORKS

STANDARD STREET SECTION

ST-10

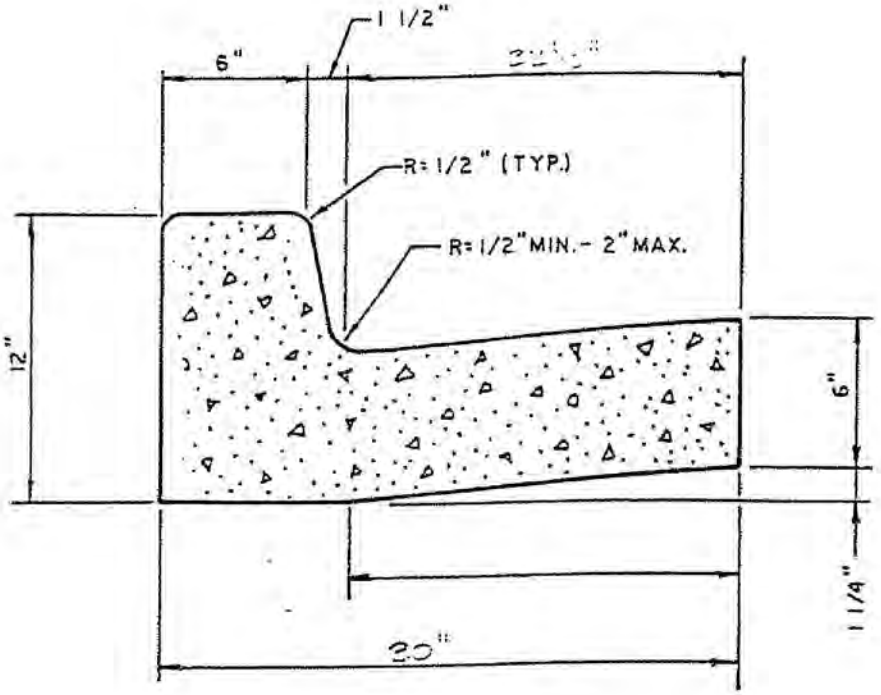

NOTES:

1. CROSS SECTIONAL AREA 1.54 SQUARE FEET.
2. 17.5 LF, PER CUBIC YARD OF CONCRETE.
3. CONCRETE SHALL BE CLASS B P.C.C.
4. AN APPROXIMATE 4-INCH, FLOW LINE SHALL BE LEFT SMOOTH TROWELED.
5. ALL BROOMING SHALL BE PARALLEL TO THE DIRECTION OF FLOW.
6. 1/2 INCH, PRE MOLDED JOINT FILLER SHALL BE INSTALLED IN EXPANSION JOINTS AT REGULAR INTERVALS NOT EXCEEDING 20 FEET, AT THE BC AND EC OF ALL CURB RETURNS AND AT THE END OF ALL DRIVEWAYS AND SHALL BE HELD FIRMLY IN PLACE PRIOR TO PLACING CONCRETE.
7. ALL WORK TO BE DONE AND ALL MATERIALS SUPPLIED SHALL CONFORM TO THE "CITY STANDARD SPECIFICATIONS".
8. A MINIMUM OF 2 INCHES OF SAND, OR CLASS 2 AGGREGATE BASE, TO BE PLACED UNDER THE CURB.
9. CONTRACTOR SHALL NOTIFY THE CITY ENGINEER FOR INSPECTION AT LEAST 24 HOURS PRIOR TO PLACING CONCRETE.

DATE: AUGUST 2011	DRAWN BY: WJK	APPROVED BY: DHS	SCALE: NONE

CITY OF WHEATLAND INC. 1874 DEPARTMENT OF PUBLIC WORKS	STANDARD 6" CURB AND GUTTER	ST-11

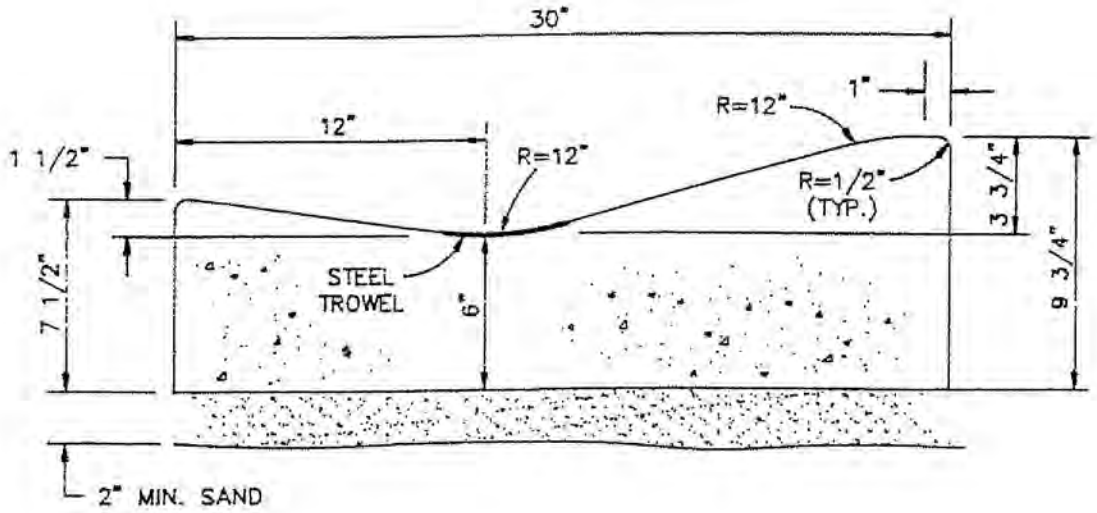

NOTES:

1. CROSS SECTIONAL AREA 1.56 SQUARE FEET.
2. 17.3 LF., PER CUBIC YARD OF CONCRETE.
3. CONCRETE SHALL BE CLASS B P.C.C.
4. AN APPROXIMATE 4-INCH, FLOW LINE SHALL BE LEFT SMOOTH TROWELED.
5. ALL BROOMING SHALL BE PARALLEL TO THE DIRECTION OF FLOW.
6. 1/2 INCH, PRE MOLDED JOINT FILLER SHALL BE INSTALLED IN EXPANSION JOINTS AT REGULAR INTERVALS NOT EXCEEDING 20 FEET, AT THE BC AND EC OF ALL CURB RETURNS AND AT THE END OF ALL DRIVEWAYS AND SHALL BE HELD FIRMLY IN PLACE PRIOR TO PLACING CONCRETE.
7. ALL WORK TO BE DONE AND ALL MATERIALS SUPPLIED SHALL CONFORM TO THE "CITY STANDARD SPECIFICATIONS".
8. A MINIMUM OF 2 INCHES OF SAND, OR CLASS 2 AGGREGATE BASE, TO BE PLACED UNDER THE CURB.
9. CONTRACTOR SHALL NOTIFY THE CITY ENGINEER FOR INSPECTION AT LEAST 24 HOURS PRIOR TO PLACING CONCRETE.

DATE: AUGUST 2011	DRAWN BY: WJK	APPROVED BY: DHS	SCALE: NONE

DEPARTMENT OF PUBLIC WORKS	ROLLED CURB AND GUTTER	ST-12

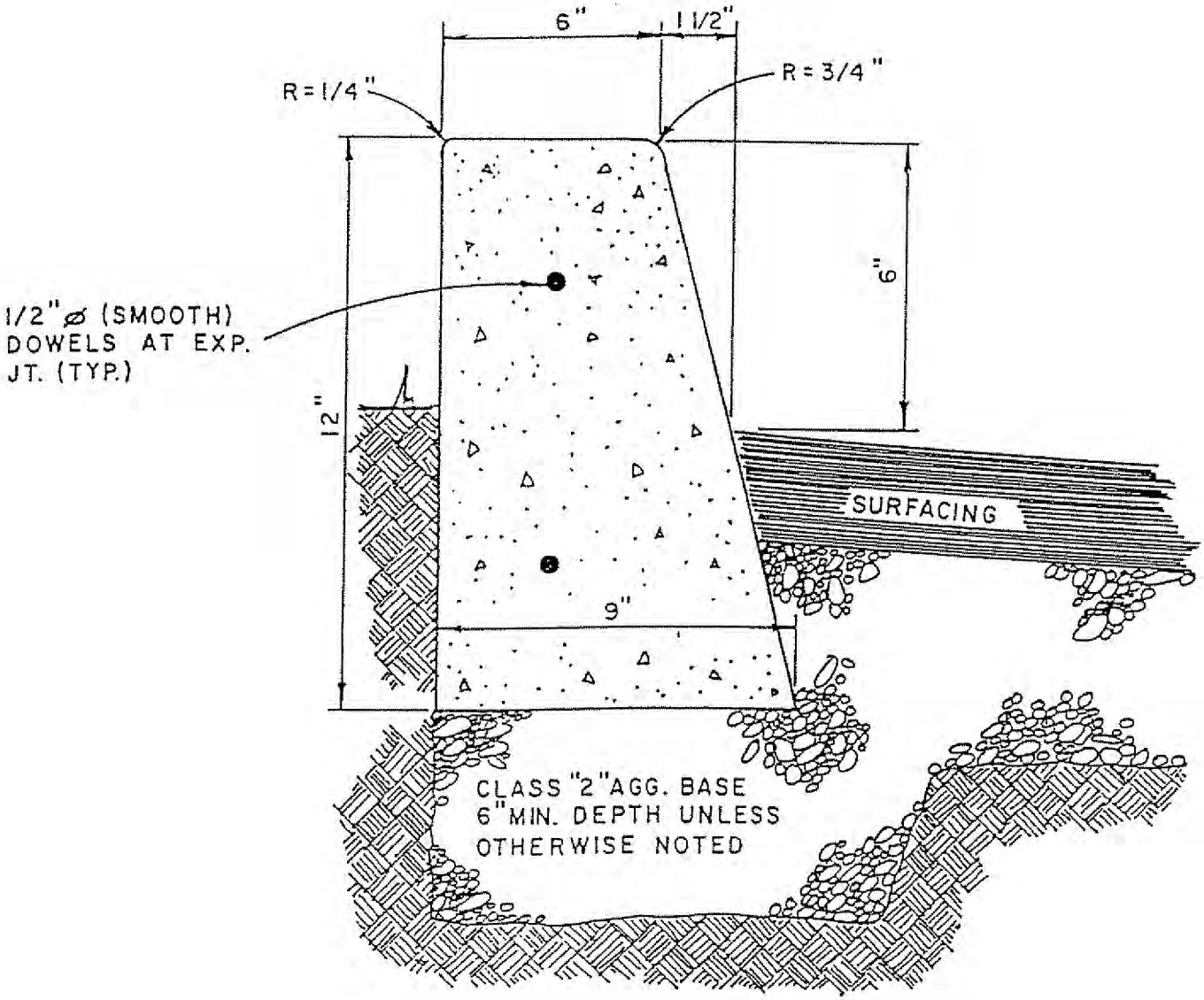

NOTES:

1. THIS SECTION TO BE USED ONLY FOR PARKING LOTS OR AS APPROVED BY THE ENGINEER.
2. CONCRETE SHALL BE CLASS B, 4" MAX. SLUMP -40.5 LIN. FT. PER CUBIC YARD.
3. PROVIDE 1/2" EXPANSION JOINTS AT 15' O.C. MAX. W/ 2-1/2"⌀ x 24" (SMOOTH) DOWELS AT EACH JOINT.

DATE: AUGUST 2011	DRAWN BY: GF	APPROVED BY: DHS	SCALE: NONE

CITY OF WHEATLAND INC. 1874 DEPARTMENT OF PUBLIC WORKS	VERTICAL CURB	ST-13

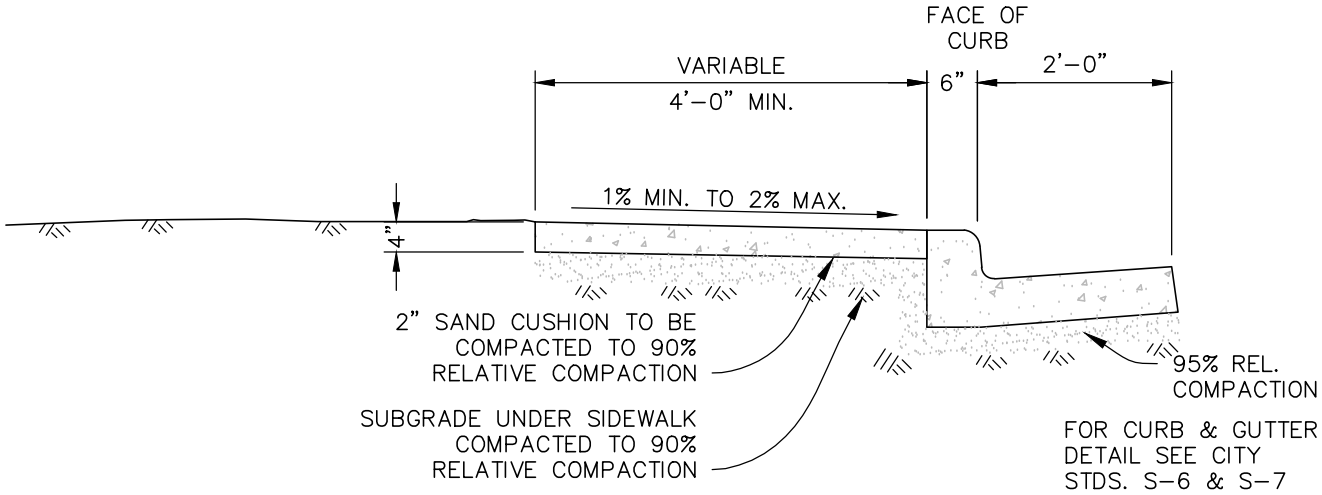

TYPICAL SECTION

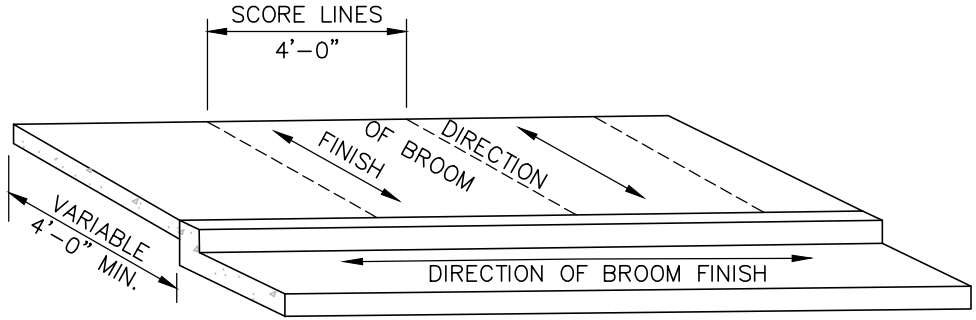

DETAIL

NOTES:

1. ALL CONCRETE SHALL BE CLASS B P.C.C.
2. 1/2 INCH, PREMOLDED JOINT FILLER SHALL BE INSTALLED IN EXPANSION JOINTS AT REGULAR INTERVALS NOT TO EXCEED 20 FEET, AT THE BC AND EC OD ALL CURB RETURNS, AT THE ENDS OF ALL HANDICAP RAMPS AND DRIVEWAYS AND SHALL BE HELD FIRMLY IN PLACE PRIOR TO PLACING CONCRETE.
3. A MINIMUM OF 2 INCHES OF SAND OR CLASS 2 AGGREGATE BASE TO BE PLACED UNDER THE SIDEWALK.
4. ALL WORK TO BE DONE AND ALL MATERIALS SUPPLIED SHALL CONFORM TO THE "CITY STANDARD SPECIFICATIONS."
5. CONTRACTOR SHALL NOTIFY THE CITY ENGINEER FOR INSPECTION AT LEAST 24 HOURS PRIOR TO PLACING CONCRETE.

CITY OF WHEATLAND INC. 1874 DEPARTMENT OF PUBLIC WORKS	STANDARD SIDEWALK	SCALE: NONE DATE: AUGUST 2011 DRAWN BY: WJK APPROVED BY: DHS	ST-14

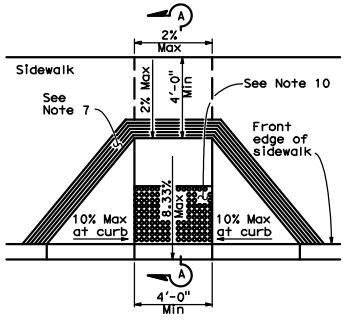

CASE A

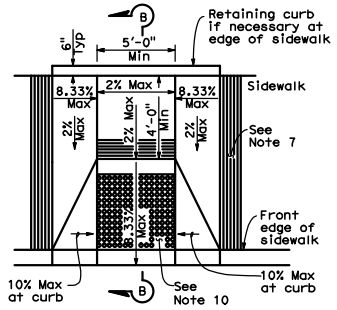

CASE B

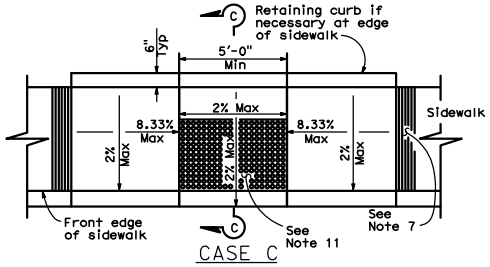

CASE C

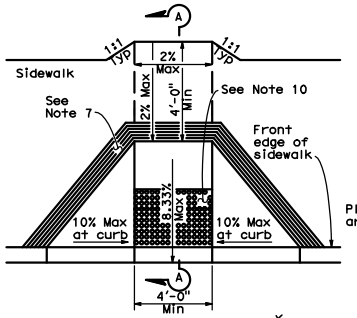

CASE D

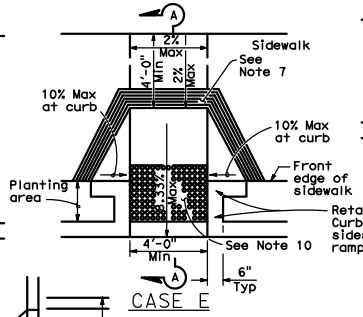

CASE E

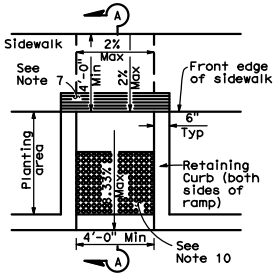

CASE F

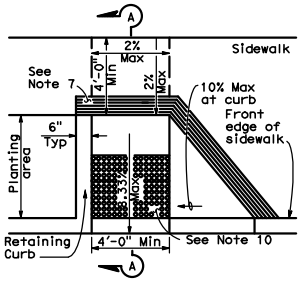

CASE G

See Note 4

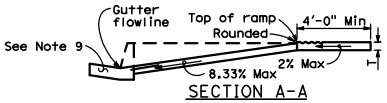

SECTION A-A

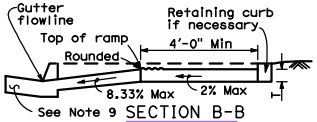

SECTION B-B

Depress entire sidewalk as required

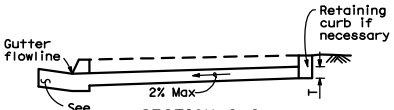

SECTION C-C

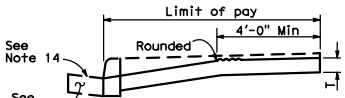

RETROFIT DETAIL

Existing curb and sidewalk

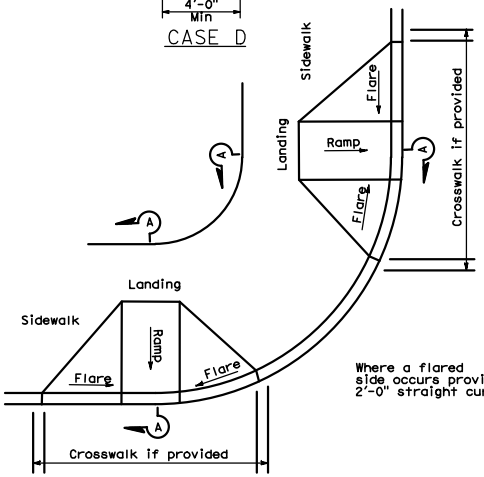

DETAIL A

TYPICAL TWO-RAMP CORNER INSTALLATION

See Note 1

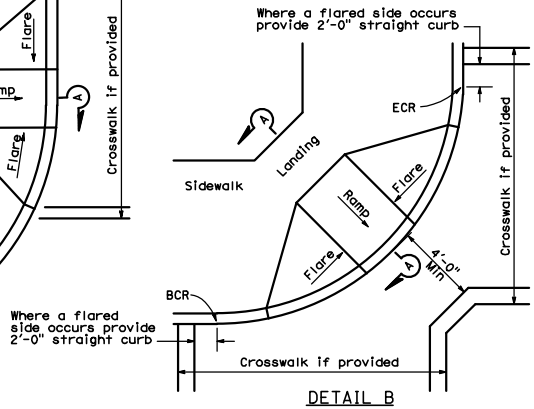

DETAIL B

TYPICAL ONE-RAMP CORNER INSTALLATION

See Notes 1 and 3

NO SCALE

1. As site conditions dictate, Case A through Case G curb ramps may beused for corner installations similar to those shown in Detail A and Detail B. The case of curb ramps used in Detail A do not have to be the same. Case A through Case G curb ramps also may be used at mid block locations, as site conditions dictate.
2. If distance from curb to back of sidewalk is too short to accommodate ramp and 4'-0" platform (landing) as shown in Case A, the sidewalk may be depressed longitudinally as in Case B, or C or may be widened as in Case D.
3. When ramp is located in center of curb return, crosswalk configuration must be similar to that shown for Detail B. Detail B configuration should be avoided if possible. The Detail A configuration is preferred.
4. As site conditions dictate, the retaining curb side and the flared side of the Case G ramp shall be constructed in reversed position.
5. If located on a curve, the sides of the ramp need not be parallel, but the minimum width of the ramp shall be 4'-0". The curb ramp shall point in the direction of the crosswalk path of travel.
6. Side slope of ramp flares vary uniformly from a maximum of 10% at curb to conform with longitudinal sidewalk slope adjacent to top of the ramp, except in Case C.
7. The curb ramp shall be outlined, as shown, with a 1'-0" wide border with ¼" grooves approximately ¾" on center. See grooving detail.
8. Transitions from ramps and landing to walks, gutters or streets shall be flush and free of abrupt changes.
9. Maximum slopes of adjoining gutters, the road surface immediately adjacent to the curb ramp or accessible route shall not exceed 5 percent within 4'-0" of the bottom of the curb ramp. The slope at the top of ramp shall not exceed 2%.
10. Curb ramps shall have a detectable warning surface that extends the full width and depth of the curb ramp. Detectable Warning Surfaces shall conform to the details on this plan and the requirements in the Special Provisions.
11. The detectable warning strip shall extend the full length on the bottom landing and shall be a minimum of three (3) feet in depth measured from the back edge of the curb.
12. Sidewalk and ramp thickness, "T", shall be 4" minimum.
13. Utility pull boxes, manholes, vaults and all other utility facilities within the boundaries of the curb ramp will be relocated or adjusted to grade by the owner prior to, or in conjunction with, curb ramp construction.
14. For retrofit conditions, removal and replacement of curb apron will be at the Contractor's option, unless otherwise shown on project plans.
15. Curb ramp details come from the State of California Department of Transportation Standard Plan Book sheet ABBA, dated September 1, 1990.

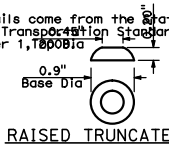

RAISED TRUNCATED DOME

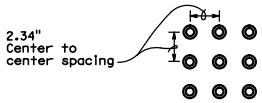

RAISED TRUNCATED DOME PATTERN (IN-LINE)

DETECTABLE WARNING SURFACE

See Note 10

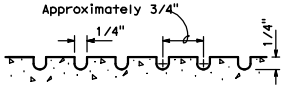

GROOVING DETAIL

CITY OF WHEATLAND INC. 1874 DEPARTMENT OF PUBLIC WORKS	CURB RAMP DETAILS	SCALE: NONE DATE: AUGUST 2011 DRAWN BY: GF APPROVED BY: DHS	ST-15

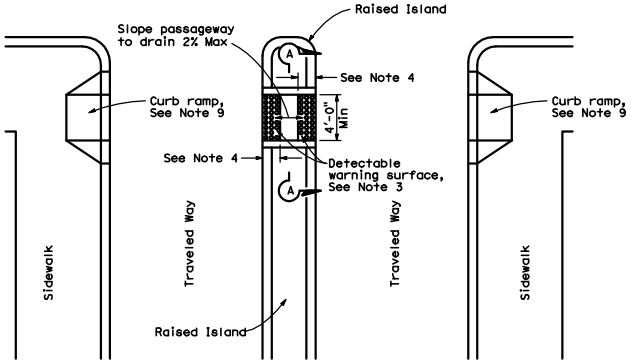

TYPE A PASSAGEWAY

NOTES:

1. *Sidewalk, ramp and passageway thickness, "T", shall be 4" minimum.*
2. *For details of detectable warning surfaces, see ST–15.*
3. *Where an island passage way length is less than eight (8) feet, use NO the detectable warning surfaces. Where the island passage way length is greater than eight (8) feet, each detectable warning strip shall extend the full width of the passage way and three (3) foot depth of the passage way length.*
4. *Transitions from ramps to walks, gutters or streets shall be flush and free of abrupt changes.*
5. *Maximum slopes of adjoining gutters, the road surface immediately adjacent to the curb ramp or accessible route shall not exceed 5 percent within 4'-0" of the bottom of the curb ramp. The slope at the top of ramp shall not exceed 2%.*
6. *Utility pull boxes, manholes, vaults and all other utility facilities within the boundaries of the curb ramp will be relocated or adjusted to grade by the owner prior to, or in conjunction with, curb ramp construction.*
7. *For additional curb ramp details, see Standard ST–15.*

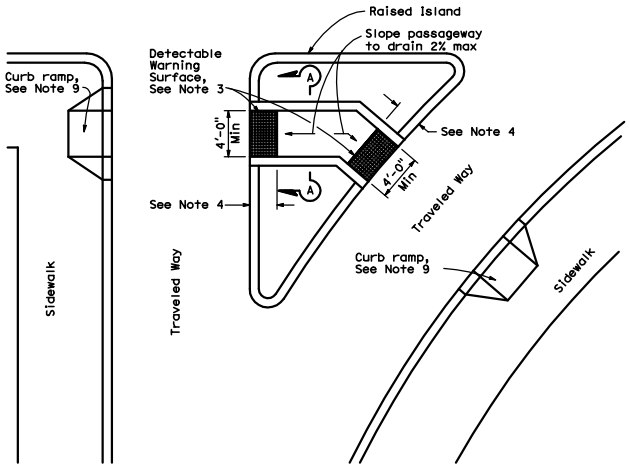

TYPE B PASSAGEWAY

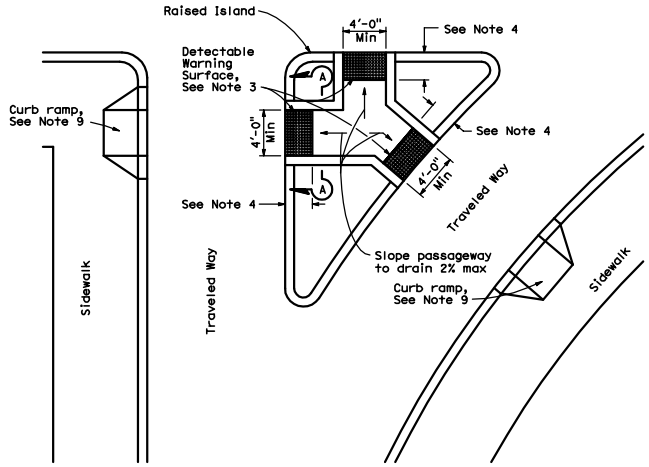

TYPE C PASSAGEWAY

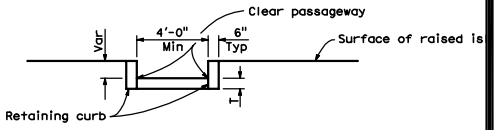

SECTION A-A

DEPARTMENT OF PUBLIC WORKS	CURB RAMP AND ISLAND PASSAGEWAY DETAILS	SCALE: NONE DATE: AUGUST 2011 DRAWN BY: GF/LM APPROVED BY: DHS	ST–16

LEGEND:

1. THE MAXIMUM LONGITUDINAL GRADE OF THE SIDEWALK THROUGH THE DRIVEWAY IS 5% IF THE STREET GRADE ALLOWS. THE MAXIMUM TRANSITION TO OBTAIN 5% IS 15 FEET. OTHERWISE A MAXIMUM GRADE OF 8.33% SHALL BE OBTAINED BETWEEN 15 AND 25 FEET. 25 FEET IS THE MAXIMUM TRANSITION REQUIRED/ALLOWED, REGARDLESS OF LONGITUDINAL STREET GRADE. THE INCLINED WALK SHALL HAVE A DETECTABLE WARNING SURFACE THAT EXTENDS THE FULL WIDTH AND 3'-0" DEEP AT THE BOTTOM OF THE INCLINE. THE DETECTABLE WARNING SURFACE SHALL CONFORM TO THE DETAILS SHOWN ON ST-15."
2. TOOL JOINT.
3. SCORE MARKS EVERY 4-FEET FOR 4-FOOT SIDEWALK AND 5-FEET FOR 5-FOOT SIDEWALK, AND ETC.
4. 1-INCH HIGH ROLLED LIP AT 45° BATTER.
5. TYPE 2 CURB AND GUTTER: IF EXISTING IS NOT TYPE 2 SECTION, MATCH THE EXISTING GUTTER PAN UNLESS OTHERWISE REQUIRED PER THE APPROVED PLAN.
6. DRIVEWAY WIDTH PER THE APPROVED PLAN.
7. ADJACENT SIDEWALK: IF EXISTING SIDEWALK EXCEEDS 2% CROSS-SLOPE, REPLACE 5-FEET ADDITIONAL EXISTING SIDEWALK AND TRANSITION TO 2% MAXIMUM CROSS-GRADE WITHIN THE DRIVEWAY.
8. RETAINING CURB

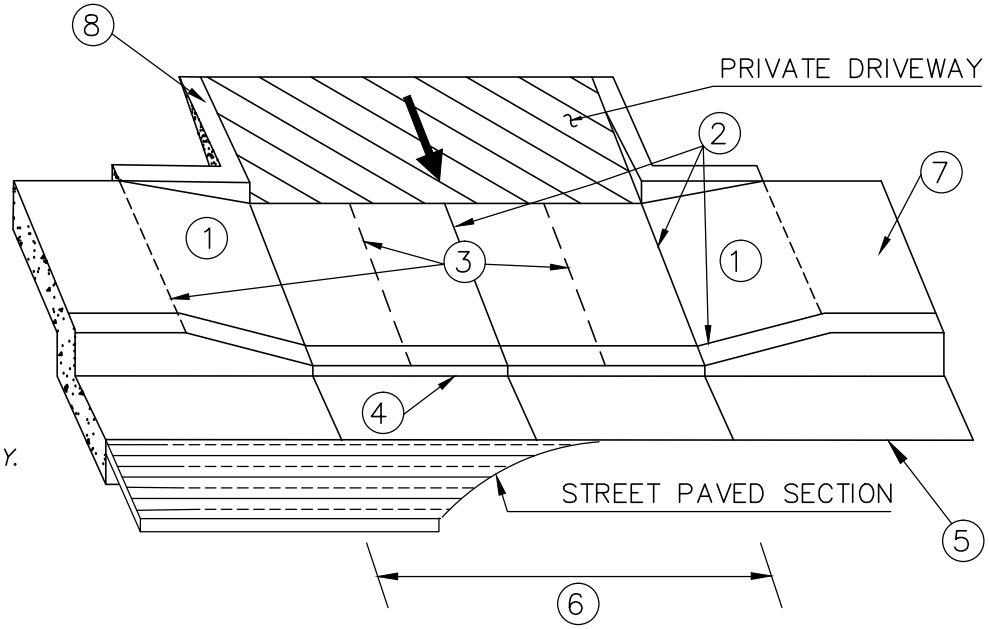

NOTES:

1. SIDEWALK CROSS-GRADE THROUGH THE ENTIRE DRIVEWAY SHALL BE 1% MINIMUM TO 2% MAXIMUM.
2. FOR COMMERCIAL* DRIVEWAY: CONCRETE SHALL BE MINIMUM 8-INCHES THICK WITH NO. 4, GRADE 60 REBAR AT 18-INCHES ON CENTERS. USE 3-INCH DOBIES (REBAR SPACERS) AT 3 FOOT INTERVALS. EIGHT-INCH SECTION IS FROM TOP OF APRON TO TOP OF APRON, AND FROM THE LIP OF GUTTER TO THE BACK OF WALK.
3. FOR RESIDENTIAL (SINGLE FAMILY AND DUPLEX) DRIVEWAY: CONCRETE SHALL BE MINIMUM 6-INCHES THICK FOR WALK, APRON AND GUTTER.
4. COMMERCIAL OR RESIDENTIAL DRIVEWAYS SHALL BE PLACED MONOLITHICALLY. ALL CONCRETE SHALL BE CLASS A, SIX SACK.
5. BASE FOR CONCRETE SHALL BE NATIVE SOIL OR CLASS 2, 3/4-INCH AGGREGATE BASE, EITHER PROCESSED 6-INCHES THICK TO 95% RELATIVE COMPACTION.
6. WHERE CURB IS EXISTING AND NO DEPRESSION HAS BEEN PROVIDED, CURB SHALL BE REMOVED TO THE FIRST EXPANSION JOINT BEYOND EITHER SIDE.
7. DRIVEWAYS SHALL NOT BE CONSTRUCTED CLOSER THAN 20 FEET TO THE STREET CURB RETURNS UNLESS APPROVED BY THE ENGINEER.
8. MINIMUM LENGTH OF FULL HEIGHT CURB BETWEEN DRIVEWAYS ON THE SAME LOT SHALL BE 24 FEET.

* COMMERCIAL (FOR THE PURPOSE OF THIS DETAIL)= COMMERICAL, INDUSTRIAL, AND MULTI-FAMILY RESIDENTIAL

CITY OF WHEATLAND INC. 1874 DEPARTMENT OF PUBLIC WORKS	RESIDENTIAL/COMMERCIAL DRIVEWAY (ATTACHED WALK)	SCALE: NONE DATE: AUGUST 2011 DRAWN BY: GF APPROVED BY: DHS	ST-17

LEGEND:

1. TOOL JOINT.
2. SCORE MARKS EVERY 4 FEET FOR 4 FOOT SIDEWALK AND 5-FEET FOR 5-FOOT SIDEWALK, AND ETC.
3. 1 INCH HIGH ROLLED LIP AT 45° BATTER.
4. TYPE 2 CURB AND GUTTER: IF EXISTING IS NOT TYPE 2 SECTION, MATCH THE EXISTING GUTTER PAN UNLESS OTHERWISE REQUIRED PER THE APPROVED PLAN.
5. DRIVEWAY WIDTH PER THE APPROVED PLAN.
6. ADJACENT SIDEWALK: IF EXISTING SIDEWALK EXCEEDS 2% CROSS-SLOPE, REPLACE 5-FEET ADDITIONAL EXISTING SIDEWALK AND TRANSITION TO 2% MAXIMUM CROSS-GRADE WITHIN THE DRIVEWAY.
7. STRAIGHT GRADE FROM SIDEWALK TO LIP AT FLOWLINE.

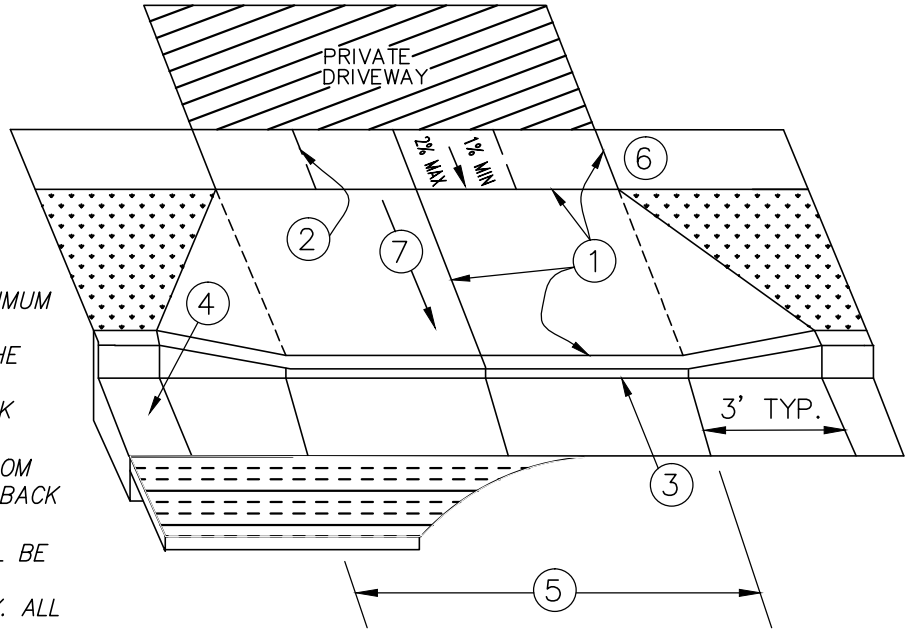

NOTES:

1. SIDEWALK CROSS-GRADE THROUGH THE ENTIRE DRIVEWAY SHALL BE 1% MINIMUM TO 2% MAXIMUM.
2. THE LONGITUDINAL GRADE OF THE SIDEWALK IS GENERALLY THE SAME AS THE STREET.
3. FOR COMMERCIAL* DRIVEWAY: CONCRETE SHALL BE MINIMUM 8-INCHES THICK WITH NO. 4, GRADE 60 REBAR AT 18-INCHES ON CENTERS. USE 3-INCH DOBIES(REBAR SPACERS) AT 3 FOOT INTERVALS. EIGHT-INCH SECTION IS FROM TOP OF APRON TO TOP OF APRON, AND FROM THE LIP OF GUTTER TO THE BACK OF WALK.
4. FOR RESIDENTIAL (SINGLE FAMILY AND DUPLEX) DRIVEWAY: CONCRETE SHALL BE MINIMUM 6-INCHES THICK FOR WALK, APRON AND GUTTER.
5. COMMERCIAL OR RESIDENTIAL DRIVEWAYS SHALL BE PLACED MONOLITHICALLY. ALL CONCRETE SHALL BE CLASS A, SIX SACK.
6. BASE FOR CONCRETE SHALL BE NATIVE SOIL OR CLASS 2, 3/4-INCH AGGREGATE BASE, EITHER PROCESSED 6-INCHES THICK TO 95% RELATIVE COMPACTION.
7. WHERE CURB IS EXISTING AND NO DEPRESSION HAS BEEN PEOVIDED, CURB SHALL BE REMOVED TO THE NEAREST EXPANSION JOINT BEYOND EITHE SIDE.
8. DRIVEWAYS SHALL NOT BE CONSTRUCTED CLOSER THAN 20 FEET TO STREET CURB RETURNS UNLESS APPROVED BY THE ENGINEER.
9. MINIMUM LENGTH OF FULL HEIGHT CURB BETWEEN DRIVEWAYS ON THE SAME LOT SHALL BE 24 FEET.
10. WHERE AN EXISTING SIDEWALK IS IN PLACE AND IS LESS THAN THE REQUIRED THICKNESS, THAT PORTION OF SIDEWALK WITHIN THE LIMITS OF THE DRIVEWAY SHALL BE REMOVED TO THE NEAREST EXPANSION JOINT BEYOND EITHE SIDE.
11. THE MINIMUM LENGTH OF FULL HEIGHT CURB BETWEEN ADJACENT LOTS SHALL BE 6 FEET.

* COMMERCIAL (FOR THE PURPOSE OF THIS DETAIL)= COMMERICAL, INDUSTRIAL, AND MULTI-FAMILY RESIDENTIAL

CITY OF WHEATLAND INC. 1874 DEPARTMENT OF PUBLIC WORKS	RESIDENTIAL/COMMERCIAL DRIVEWAY (SEPERATE WALK)	SCALE: NONE DATE: AUGUST 2011 DRAWN BY: GF APPROVED BY: DHS	ST-18

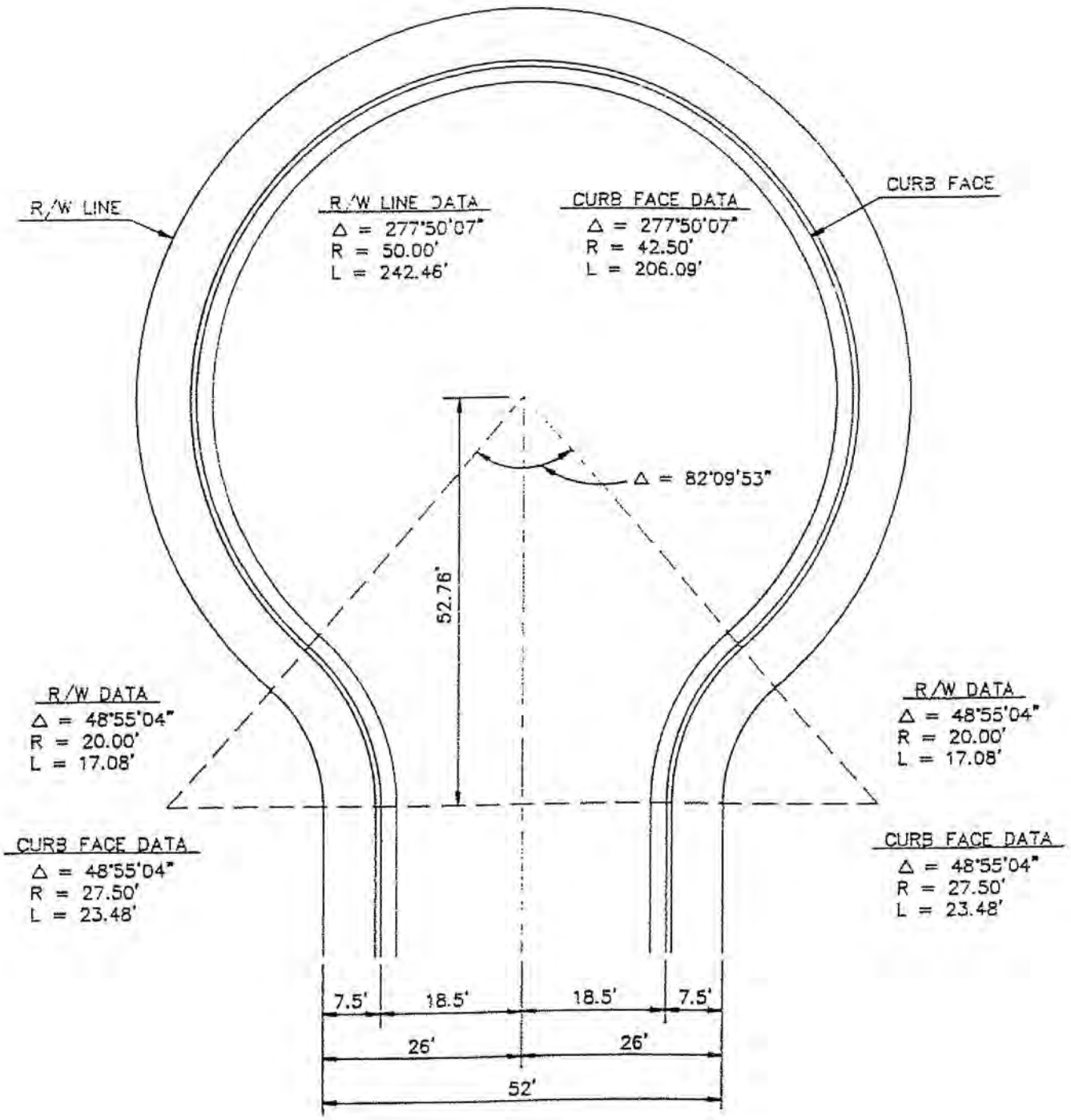

DATE: AUGUST 2011	DRAWN BY: LM	APPROVED BY: DHS	SCALE: NONE

CITY OF WHEATLAND INC. 1874 DEPARTMENT OF PUBLIC WORKS	STANDARD CUL-DE-SAC	ST-19

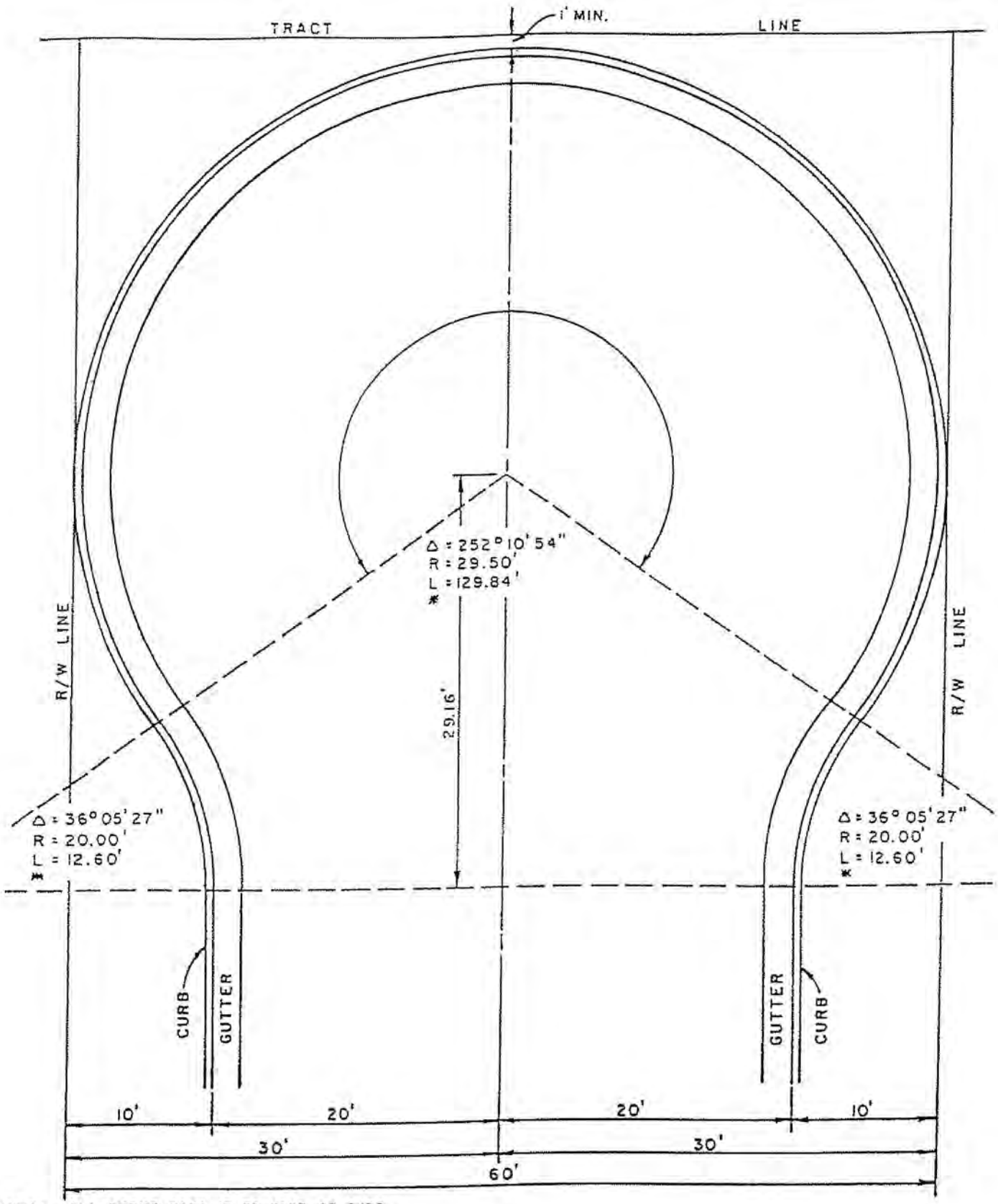

*NOTE: ALL CURVE DATA IS TO FACE OF CURB

DATE: AUGUST 2011	DRAWN BY: LM	APPROVED BY: DHS	SCALE: NONE

CITY OF WHEATLAND INC. 1874 DEPARTMENT OF PUBLIC WORKS	TEMPORARY CUL-DE-SAC	ST-20

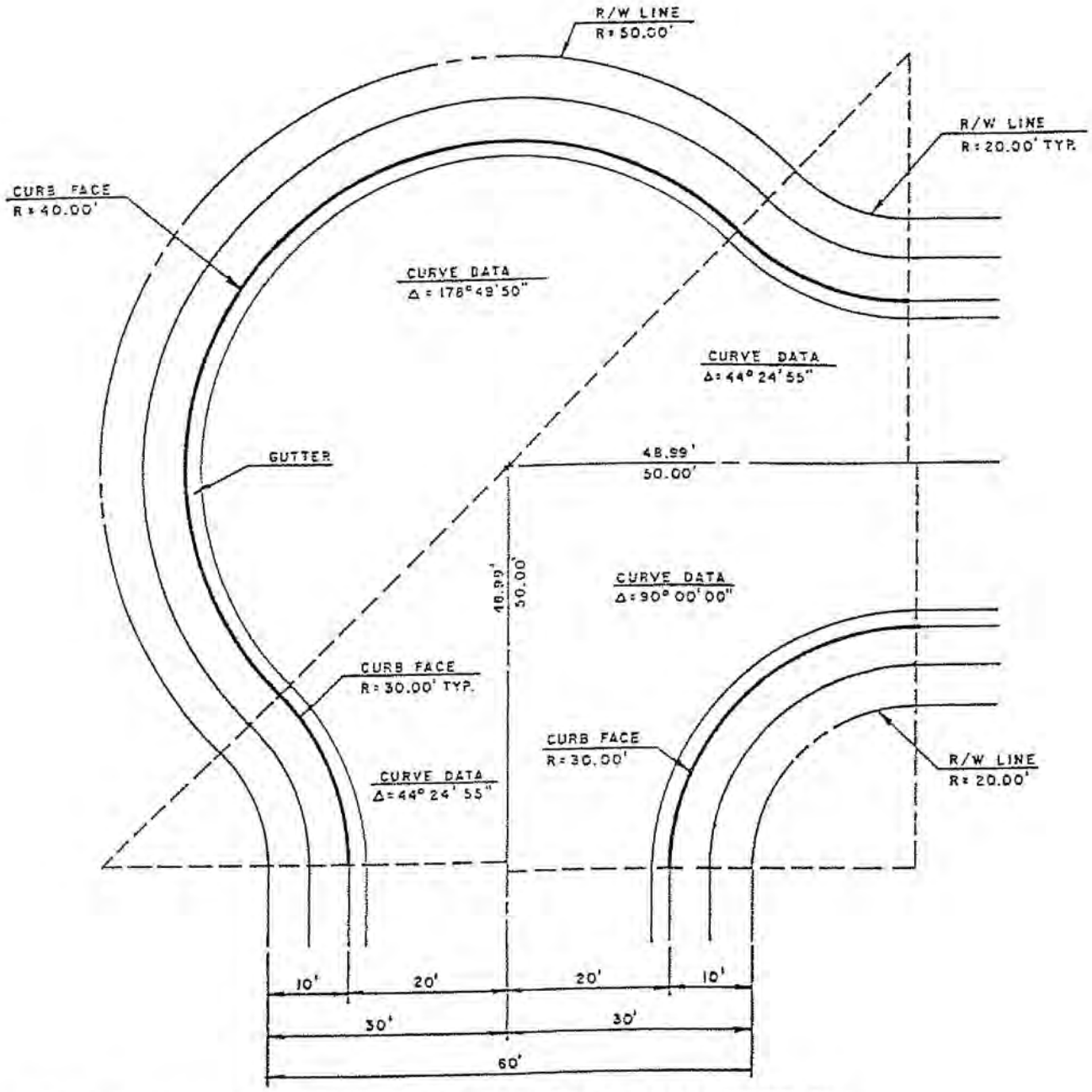

NOTE: HANDICAPPED RAMP LOCATIONS TO BE DETERMINED BY THE CITY ENGINEER.

DATE: AUGUST 2011	DRAWN BY: LM	APPROVED BY: DHS	SCALE: NONE

DEPARTMENT OF PUBLIC WORKS	CURVE "KNUCKLE"	ST-21

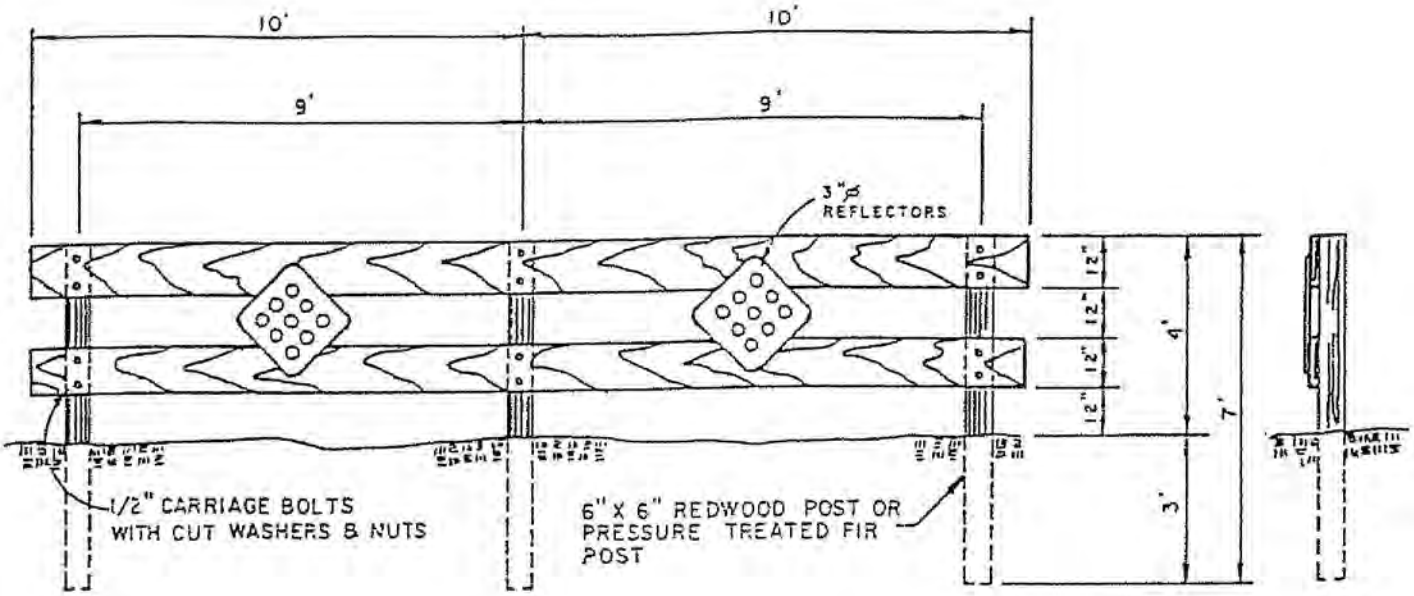

MATERIALS LIST:

2 — 2" X 12" X 20' (NO.2 AND BETTER DOUGLAS FIR)
3 — 6" X 6" X 7' ('A' AND BETTER OR PRESSURE TREATED FIR)
2 — 16" X 18" REFLECTORS (TYPE N-4)

NOTES:

1. BARRICADES TO BE ERECTED AT EACH STREET TERMINAL IN ACCORDANCE WITH THE SPECIFICATIONS.
2. ALL LUMBER TO BE S4S.
3. ALL EXPOSED SURFACES TO BE PAINTED WITH TWO COATS OF WHITE EXTERIOR GRADE PAINT.
4. BARRICADE INSTALLATION SHOWN IS TO BE USED FOR STREETS HAVING CURB TO CURB WIDTHS UP TO 40 FEET. WHERE A WIDER WIDTH OF BARRICADE IS REQUIRED, IT SHALL BE MADE IN 10 FEET MULTIPLES OF THE ABOVE UNIT.

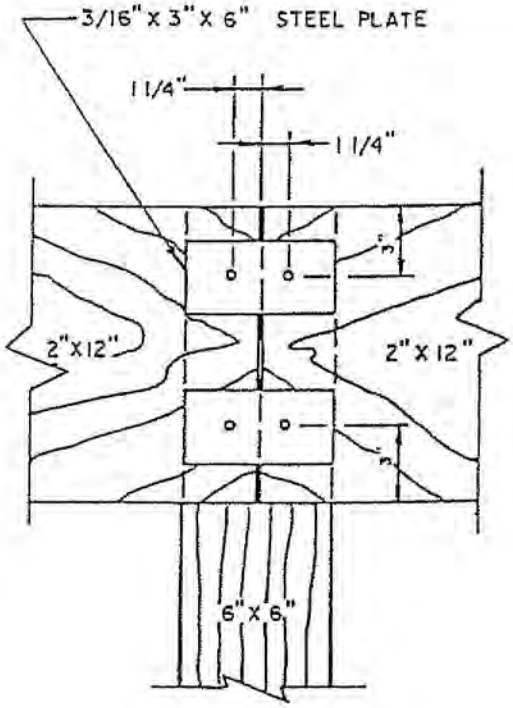

DETAIL OF BUTT JOINT

DATE: AUGUST 2011	DRAWN BY: LM	APPROVED BY: DHS	SCALE: NONE

DEPARTMENT OF PUBLIC WORKS	STANDARD BARRICADE	ST-22

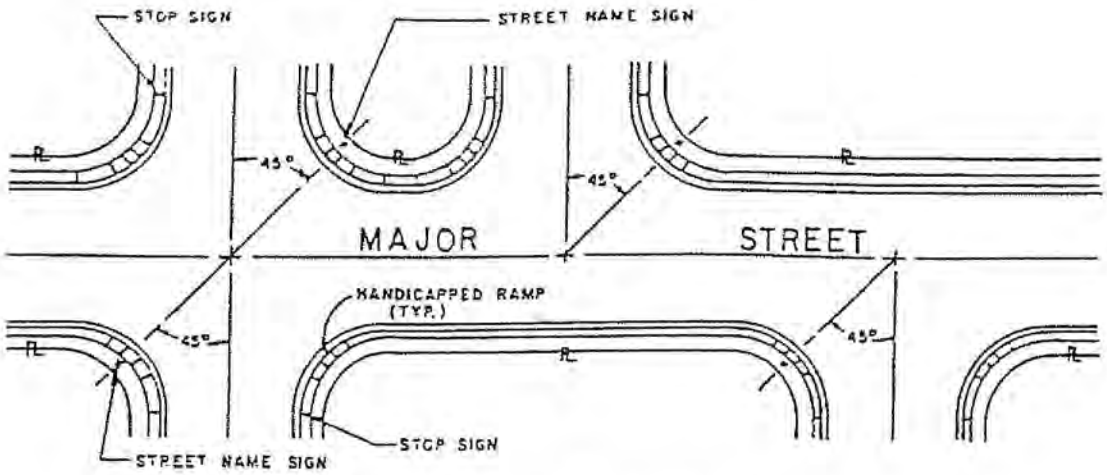

TYPICAL SIGN LOCATIONS

FOR 30' CURB RADII AT
90° INTERSECTIONS

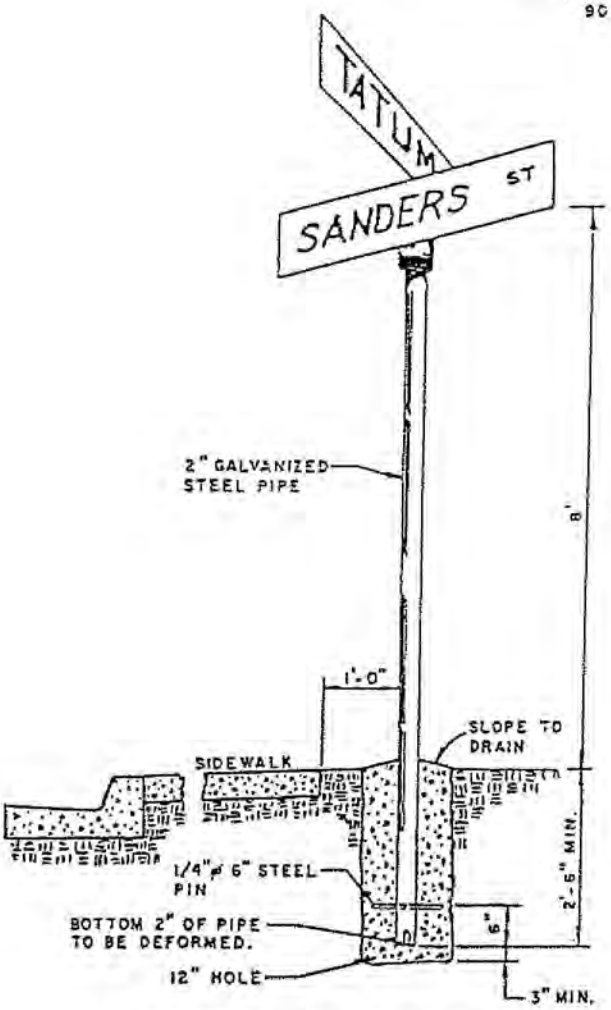

STREET NAME SIGN ASSEMBLY & INSTALLATION

MINIMUM SIGN SPECIFICATIONS

INTEGRAL STREET NAME—NUMBER SIGN TO BE HAWKINS-HAWKINS NO. (HD)PL-2C2P OR EQUAL. PLATE COVERINGS, LETTERS, AND NUMBERS SHALL BE SCOTCHLITE REFLECTIVE SHEETING, ENGINEERING GRADE:

PLATES: FB-11B (GREEN)
LETTERS, NUMBERS: SM-C1 (SILVER-WHITE)
4" LETTERS
2" ABBREVIATIONS

RESIDENTIAL PLATES ARE 6" HIGH
MAXIMUM LETTERS PER NAME:
ONE WORD - 12 LETTERS
TWO WORD - 10 LETTERS

NOTES:

1. ALL VARIANCES IN SIGN LOCATIONS TO BE APPROVED BY THE ENGINEER.
2. STREET SIGN TO BE LOCATED ON THE NEAR RIGHT SIDE OF THE INTERSECTION OF THE MAJOR STREET.
3. ALLOWABLE ABBREVIATIONS TO BE USED ON STREET NAME SIGNS ARE AS FOLLOWS:

BOULEVARD	BL	DRIVE	DR
STREET	ST	ROAD	RD
AVENUE	AV	LANE	LN
PLACE	PL	COURT	CT
CIRCLE	CR	WAY	WY

4. STREET NAME SIGNS IN RESIDENTIAL AREAS SHALL BE INSTALLED 1'-0" FROM BACK EDGE OF SIDEWALK.
5. STREET NAME SIGNS IN COMMERCIAL AREAS SHALL BE INSTALLED IN THE SIDEWALK, 1'-0" FROM THE PROPERTY LINE.
6. STOP SIGN STANDARDS SHALL BE LOCATED AT THE CURB RETURN, AND SHALL BE SET 1'-0" FROM THE BACK OF CURB UNLESS THE ENGINEER DETERMINES THAT THE STOP SIGN AND STREET NAME SIGN SHALL BE INCORPORATED ON ONE STANDARD WHICH WILL BE LOCATED AS PER NOTE 2.

DATE: AUGUST 2011	DRAWN BY: LM	APPROVED BY: DHS	SCALE: NONE

CITY OF WHEATLAND INC. 1874 DEPARTMENT OF PUBLIC WORKS	STREET NAME SIGN & INSTALLATION	ST-23

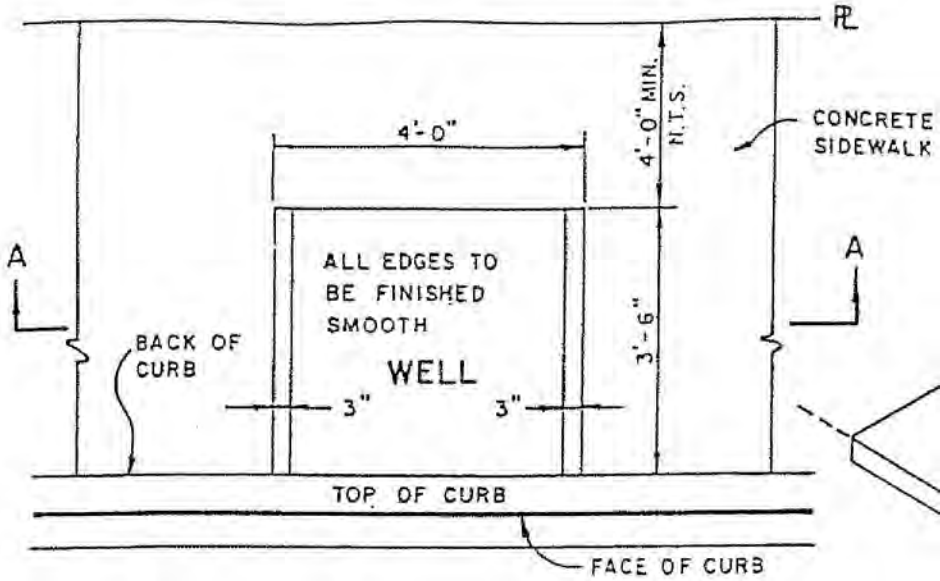

PLAN

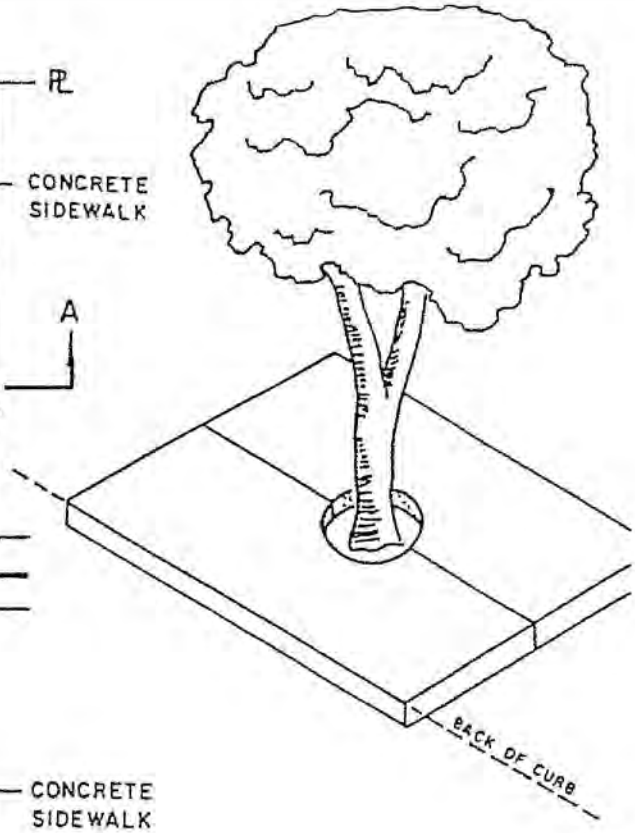

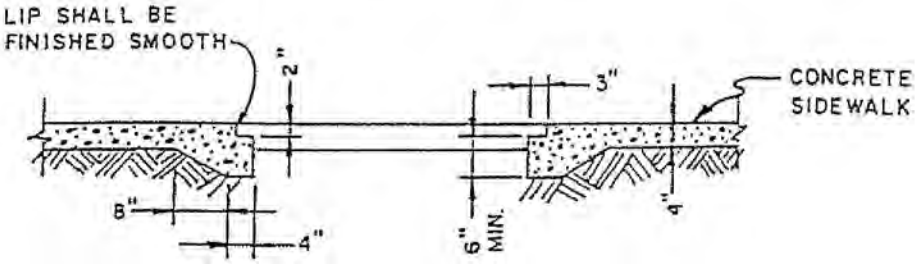

SECTION A-A

COVER

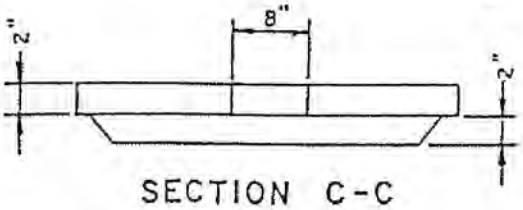

SECTION C-C

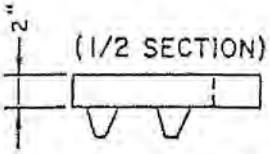

SECTION B-B

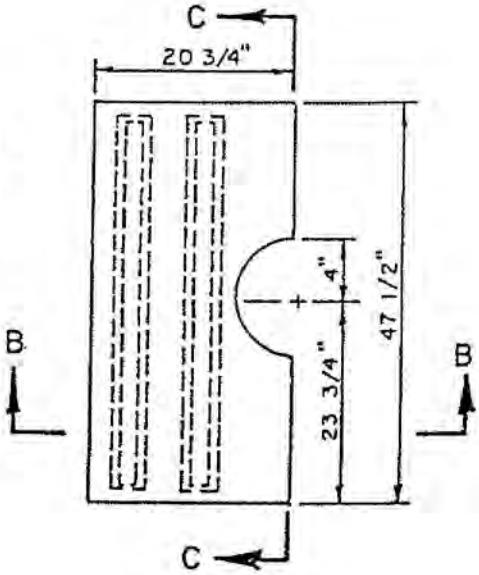

NOTES

1. ALL DIMENSIONS SHOWN, TO BE HELD EXACTLY TO INSURE PROPER FIT FOR PRECAST COVER.
2. COVER TO BE SIMILAR AND EQUAL TO THOSE MANUFACTURED BY E.W. COOK, INC.
3. SPACING AND LOCATION TO BE DESIGNATED BY THE ENGINEER.

DATE: AUGUST 2011	DRAWN BY: LM	APPROVED BY: DHS	SCALE: NONE

CITY OF WHEATLAND INC. 1874 DEPARTMENT OF PUBLIC WORKS	TREE AND WELL COVER (EXISTING)	ST-24

MASTER TREE LIST

NAME	SIZE	RATE OF GROWTH	ROOT SYSTEM	PESTS & DISEASES	CARE	REMARKS
A. EVERGREENS						
1. HOLLY OAK (quercus ilix)	h - 25' to 50' b - 20' to 40'	Moderate	Deep	Susceptible to caterpillars mites, thrips (host)	Fall pruning to remove suckers, spray	Selected, upright forms
2. CAMPHOR TREE (cinnamomum camphore)	h - 20' to 40' b - 30' to 50'	Slow	Shallow	Relatively free	Prune when young Water well to root	10' parkways or 8' form sidewalk
3. JAPANESE PRIVET (liqustrum lucidum)	h - 20' to 30' b - 20' to 30'	Rapid	Deep	Scale	Prune when young & Annually to shape	Excellent hedge
4. SOUTHERN MAGNOLIA (magnolia grandiflora samuel sumner or St. Marys)	h - 40' to 60' b - 40' to 55' veg. reprod. plants	Moderate	Deep	Relatively free	Deep water monthly, prune when young, fertilize	
B. DECIDUOUS						
* 1. PURPLE LEAF PLUM (prunus bl)	h - 10' to 20' b - 8' to 15'	Rapid	Average	Relatively disease free, aphids	Prune, water, spray for aphids	
2. RED HORSE CHESTNUT (aesculis carnea briot)	h - 30' to 40' b - 20' to 30'	Moderate	Average	Some aphids	Prune when young	
3. MAIDENHAIR TREE (gingko biloba, autumn gold, fairmount)	h - 50' to 70' b - 30' to 50'	Moderate	Deep	Relatively free	Little or no pruning, heavy water	An excellent tree
* 4. EUROPEAN WHITE BARK BIRCH (betula vercucasa)	h - 20' to 40' b - 12' to 20'	Rapid	Deep	Bronze birch borers, aphids	Little or no pruning, spray with DDT	Beautiful, borers may kill
* 5. CUTLEAF WEEPING BARK BIRCH (betula dalicarlica)	h - 20' to 40' b - 12' to 20'	Rapid	Deep	Bronze birch borers, aphids	Little or no pruning, spray with DDT	Beautiful, borers may kill
* 6. GOLDENRAIN TREE (koelreuteria paniculata)	h - 20' to 35' b - 15' to 20'	Rapid	Deep	Relatively free	Little or no pruning, good drainage	
* 7. SAWLEAF ZELKOVA (zelkova serrata)	h - 30' to 50' b - 30' to 50'	Rapid	Shallow	Relatively free, scale	Prune, spray	10' parkway
* 8. CHINESE PISTACHIO (pistachio chinensis)	h - 30' to 50' b - 30' to 50'	Moderate	Deep	Relatively free	Prune when young	Excellent street tree
* 9. SCHWIEDLER MAPLE (acer platenoides)	h - 25' to 50' b - 20' to 50'	Rapid	Deep	Relatively free	Annual prune, spray aphids, water monthly	Good street tree
* 10. NORWAY MAPLE (acer platenoides)	h - 25' to 50' b - 30' to 50'	Rapid	Deep	Relatively free	Annual pruning, water Monthly	
* 11. LITTLE LEAF LINDEN (tilia cordata)	h - 40' to 60' b - 30' to 50'	Rapid	Deep	Relatively free, aphids	Prune, spray for aphids, water plentifully	Excellent street tree
12. AMERICAN LINDEN (tilia americana)	h - 40' to 60' b - 30' to 50'	Rapid	Deep	Relatively free, aphids	Prune, plenty of water, spray	Excellent street tree
13. CREPE MYRTLE (lagerstroemia indica)	h - 15' to 25' b - 15' to 20'	Moderate	Shallow	Relatively free, aphids	Prune annually, water monthly, spray	May mildew during damp weather
14. SCARLET OAK, RED OAK (quercus coccinea, borealis)	h - 60' to 80' b - 50' to 65'	Moderate	Deep with laterals	Relatively free, scale & caterpillars infest	Prune when young, spray to scale	Difficult to transplant
15. EUROPEAN HACKBERRY (celtis australis)	h - 30' to 50' b - 20' to 30'	Moderate	Average	Relatively free	Little pruning, Stands neglect	Excellent street tree
16. CHINESE PAGODA (sophora japonica)	h - 20' to 30' b - 20' to 40'	Slow	Deep	Relatively free	Little pruning, water deep	Excellent street tree
17. SHADEMASTER HONEY LOCUST (gladitsia triacanthos inermis)	h - 30' to 40' b - 20' to 30'	Rapid	Deep and spreading	Relatively free	Prune to lighten crown	drops pods in winter otherwise good
18. TULIP TREE (liriodendren tulipifera)	h - 50' to 70' b - 25' to 35'	Rapid	Deep and spreading	Relatively free, scale & aphids	Prune when young, water deeply, spray	

* NOTE: Only these trees may be planted near electric utility wires.

CITY OF WHEATLAND INC. 1874

DEPARTMENT OF PUBLIC WORKS

MASTER TREE LIST

SCALE: NONE
DATE: AUGUST 2011
DRAWN BY: LM
APPROVED BY: DHS

ST-25

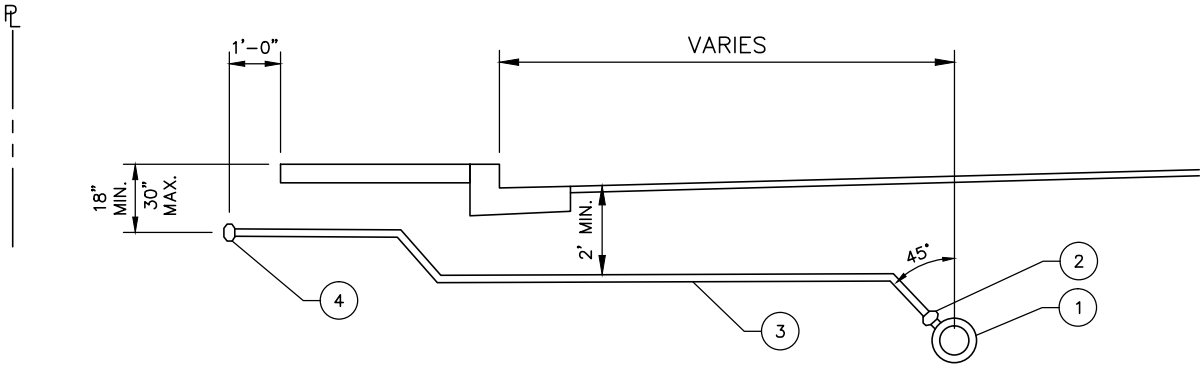

TYPICAL SECTION
2" AND SMALLER
NOT TO SCALE

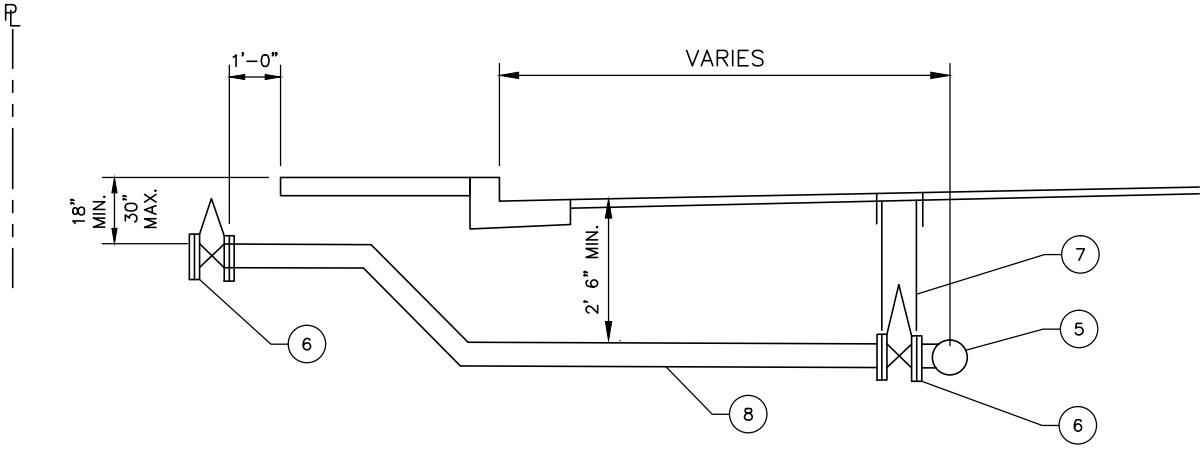

TYPICAL SECTION
LARGER THAN 2"
NOT TO SCALE

1. SERVICE SADDLE: SEE DETAIL W-2
2. CORPORATION STOP: SEE DETAIL W-2
3. SERVICE LINE: SEE DETAILS W-3, W-6, W-7 & W-8
4. CURB STOP: SEE DETAILS W-3, W-6, W-7 & W-8
5. TEE: SEE DETAIL W-2
6. GATE VALVE: RESILIENT WEDGE GATE VALVE.
7. VALVE BOX WITH TRAFFIC LID.
8. SERVICE LINE OF STANDARD WATER MAIN MATERIALS.
9. MINIMUM COVER FOR WATER MAIN SHALL BE 30".

DEPARTMENT OF PUBLIC WORKS	WATER SERVICES	SCALE: NONE DATE: AUGUST 2011 DRAWN BY: WJK APPROVED BY: DHS	W-1

MATERIALS:

SERVICE SADDLE:

1. FOR DI MAIN: DOUBLE STRAP BRONZE SADDLE, MUELLER BR 2 B OR APPROVED EQUAL WITH AWWA F.I.P. THREAD. FOR C.I.O.D. C900 PVC MAIN: DOUBLE STRAP BRONZE SADDLE, MUELLER BR 2 B; BRASS SADDLE, JONES J-996 OR APPROVED EQUAL WITH AWWA F.I.P. THREAD.
2. ZINC CAPS ON ALL BOLTS.

CORPORATION STOPS:

3. FOR 1" SERVICE AND SAMPLE STATION (USE 1" DIA CORP STOP): MUELLER N-35028 INSULATED BALL CORP STOP OR APPROVED EQUAL (INLET: MIP, OUTLET:110 CC FOR CTS O.D.).
4. FOR 1" AVRV: MUELLER N-30046 INSULATED BALL CORP STOP OR APPROVED EQUAL (INLET:MIP, OUTLET:FIP).
5. FOR 1 1/2" OR 2" SERVICES AND 2" BOV: MUELLER 300 BALL B-20046 OR APPROVED EQUAL (INLET: MIP, OUTLET: FIP).
6. DIELECTRIC COUPLING IF SERVICE PIPE IS COPPER.
7. ADAPTOR FROM M.I.P. TO COMPRESSION CONNECTION FOR CTS COPPER OR PE PIPE. (ADAPTER TO BE COPPER).

SERVICE PIPE (1" MIN DIAMETER):

8. FOR SERVICES ALL SIZES, SAMPLE STATION, AND BOV: TYPE "K" SOFT COPPER PER ASTM B88, AQUA POLYETHYLENE COATED (KAMCO), OR CTS POLYETHYLENE (PE) PER ASTM D-2737-SDR-9. ALL PLASTIC PIPE FOR WATER SERVICES SHALL BE INSTALLED AT 9 O'CLOCK AND 3 O'CLOCK POSITIONS ONLY.
9. FOR 1" AVRV: TYPE "K" COPPER TUBING (RIGID) W/M.I.P. THREADS.
10. 310 INSULATED TRACING WIRE FROM MAIN.
11. COPPER I.P. NIPPLE.
12. SWING JOINT (2-90° COPPER I.P. FITTINGS).

NOTES:

1. WRAP SADDLE AND CORPORATION STOP 12 INCHES EITHER SIDE OF THE MAIN AND WRAP COPPER SERVICE FROM MAIN TO METER WITH AN APPROVED 6 MIL POLYETHYLENE DIELECTRIC PIPE WRAP (PLOYKEN 932 OR APPROVED EQUAL).
2. SADDLES SHALL BE BACKFILLED WITH SAND.
3. TRACING WIRE SHALL BE REQUIRED ON ARV, HYDRANT RUNS, BLOW OFFS, SERVICES AND OTHER MAJOR APPURTENANCES..
4. TEFLON WRAP ALL THREADED COUPLINGS.
5. ALL PLUMBING CONNECTIONS BETWEEN DISSIMILAR METALS SHALL INCLUDE DIELECTRIC INSULATING FITTINGS TO PREVENT GALVANIC CORROSION.
6. ALL BRASS OR BRONZE PIPE OR FITTINGS TO BE DOMESTIC RATED FOR MINIMUM 200 PSI, OR APPROVED EQUAL.

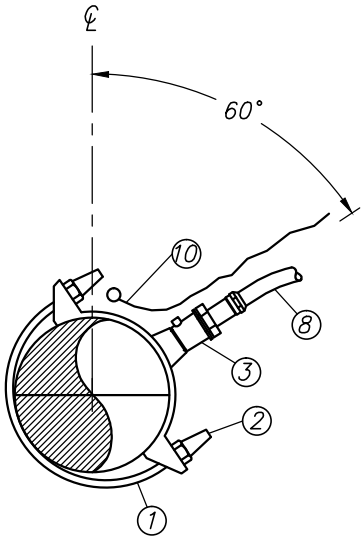

FOR 1" SERVICE (SEE W-3, W-6) AND SAMPLE STATION (SEE W-21)

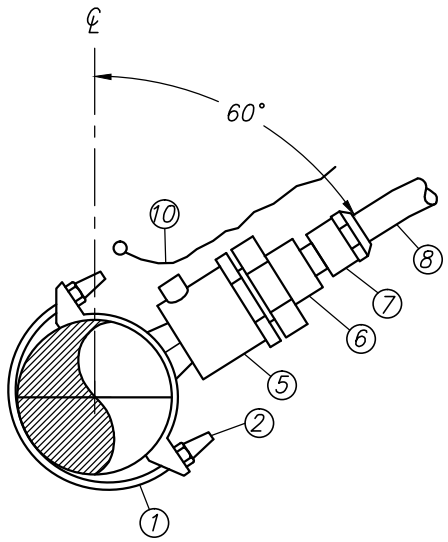

FOR 1 1/2" x 2" SERVICE (SEE W-7, W-8)

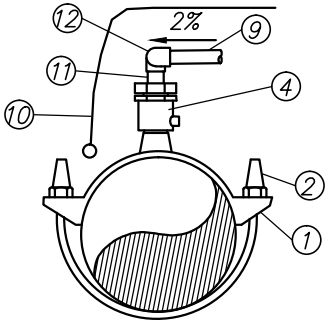

1" AVRV (SEE W-13)

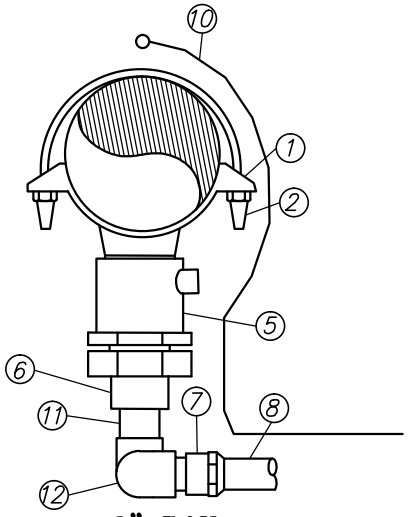

2" BOV (SEE W-12)

CITY OF WHEATLAND INC. 1874 DEPARTMENT OF PUBLIC WORKS	TAPPING SADDLE CONNECTION DETAIL (UP TO 2")	SCALE: NONE DATE: AUGUST 2011 DRAWN BY: GF/LM APPROVED BY: DHS	W-2

NOTES:

1. WATER METERS SHALL BE INSTALLED PER MANUFACTURER'S RECOMMENDATIONS.
2. INSTALL CONCRETE BLOCKING (4" X 4" X 15-1/2" SOLID SLUMP BLOCK) UNDER PERIMETER OF UTILITY BOX.
3. BURIED PIPE AND FITTINGS SHALL BE WRAPPED WITH 6-MIL POLYETHYLENE OR APPROVED EQUAL.
4. TYPE "K" COPPER PIPE MAY BE AQUA POLYETHYLENE COATED (KAMCO) PIPE.
5. ALL PLUMBING CONNECTIONS BETWEEN DISSIMILAR METALS SHALL INCLUDE DIELECTRIC INSULATING FITTINGS TO PREVENT GALVANIC CORROSION.
6. OWNER TO PURCHASE REMOTE TRANSMITTER (SEE ITEM 4) FOR LATER INSTALLATION BY CITY.
7. ALL BRASS OR BRONZE PIPE OR FITTINGS TO BE DOMESTIC RATED FOR MINIMUM 200 PSI, OR APPROVED EQUAL.
8. TEFLON WRAP ALL THREADED COUPLINGS.
9. METERS SHALL NOT BE INSTALLED WITHIN DRIVEWAYS.
10. ALL BRASS COMPONENTS SHALL BE LOW LEAD.

BILL OF MATERIALS:

1. METER RESETTER: 12-INCH MUELLER COPPER METER YOKE WITH HORIZONTAL INLET AND OUTLET, MODEL NUMBER H-1430-2AN, OR APPROVED EQUAL.
2. WATER METER: SENSUS IPERL (1-INCH), 10-3/4" LL METER WITH AMR SYSTEM, OR APPROVED EQUIVALENT.
3. METER BOX: CHRISTY MODEL B40 WITH EXTENSION MODEL B40x10, OR APPROVED EQUAL (WITH BOLT DOWN LID, WITH 1 3/4" ROUND OPENINGS FOR TOUCH PAD IN COVER).
4. REMOTE TRANSMITTER: SENSUS MODEL 520R MXU.
5. CONNECTION CONDUIT: 1/2" SCH. 80 CONDUIT TO BE INSTALLED BY CONTRACTOR TO CONNECT MULTIPLE METERS. COVER BOTH ENDS WITH TAPE TO PREVENT DIRT INTRUSION.
6. VALVE: MUELLER P-24274N, OR APPROVED EQUIVALENT. PACK JOINT COMPRESSION X F.I.P. WITH LOCK WING.
7. TOUCH PAD LID: TOUCH READ PAD LID, INCLUDED WITH METER, SEE ITEM 2 ABOVE.
8. CHECK VALVE: MUELLER H-14243N, OR APPRVED EQUIVALENT. F.I.P X F.I.P.
9. BRACING: SCH. 40 PVC PIPE THROUGH BRACING EYE.
10. VALVE RISER: 6" TO 8" SCH. 40 PVC NOTCHED AROUND PIPE SUPPORTED BY CONCRETE BLOCKING ON EACH SIDE.
11. SERVICE PIPE: ALL SERVICE TO BE 1" TYPE "K" COPPER, AQUA POLYETHYLENE COATED (KAMCO) OR CTS POLYETHYLENE (PE)
12. TRACING WIRE: 310 INSULATED
13. RADIUS = 18" MINIMUM
14. FIRE AND DOMESTIC WATER LINES: 1" DIAMETER TYPE "K" COPPER.
15. U BRANCH: MUELLER MODEL 015635-488N, OR APPROVED EQUIVALENT. F.I.P IN M.I.P. OUT ON BOTH SIDES
16. LOCK OUT VALVE: MUELLER MODEL B20200N OR APPROVED EQUIVALENT. F.I.P. X F.I.P.
17. BRASS UNION: 1 INCH
18. BRASS NIPPLE: 1" DIAMETER, 5" LONG
19. BRASS NIPPLE: 1" DIAMETER, 1-1/2" LONG
20. BRASS COUPLING: 1-INCH

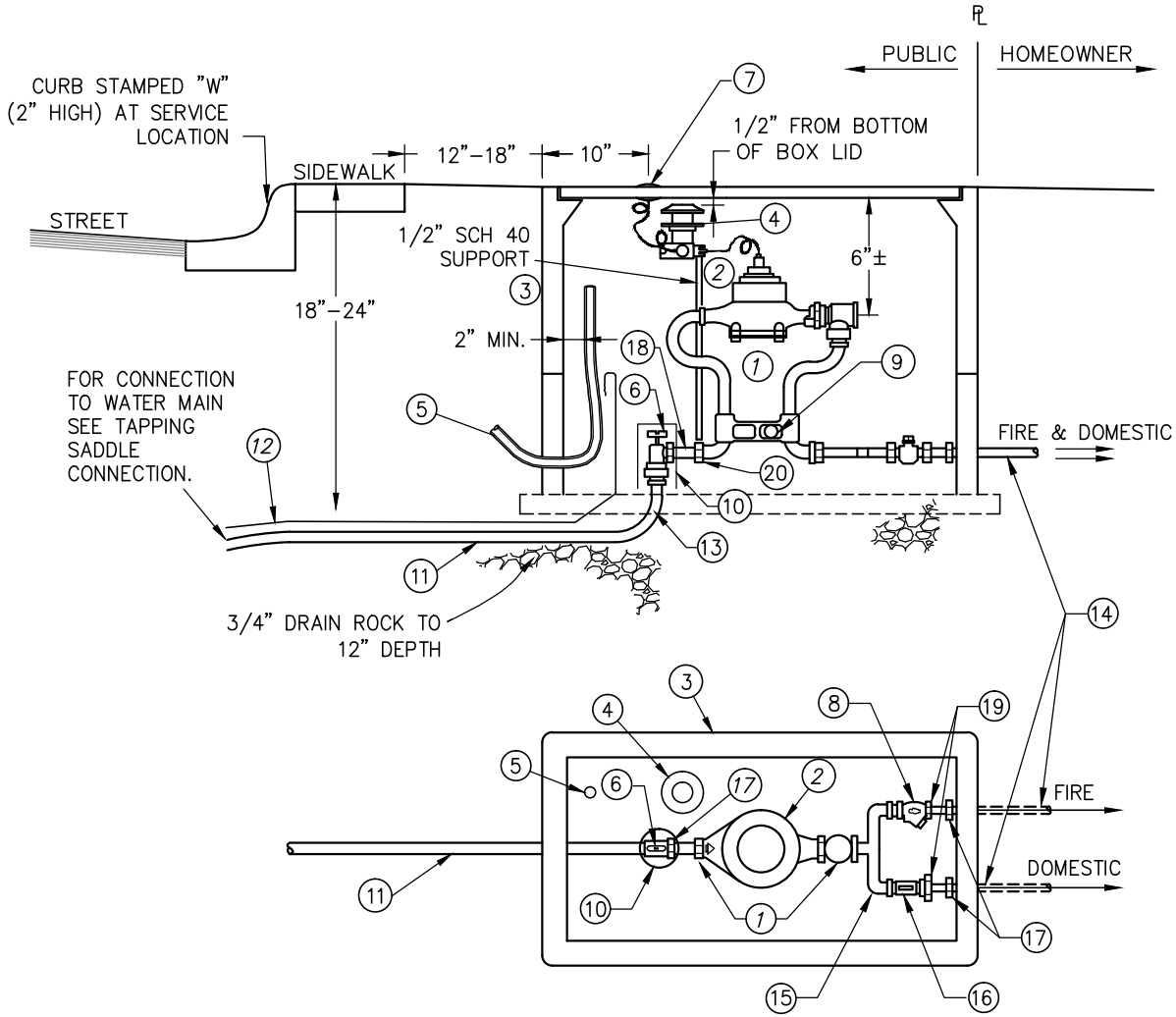

CITY OF WHEATLAND INC. 1874 DEPARTMENT OF PUBLIC WORKS	RESIDENTIAL WATER SERVICE (1")	SCALE: NONE DATE: AUGUST. 2011 DRAWN BY: LM APPROVED BY: DHS	W-3

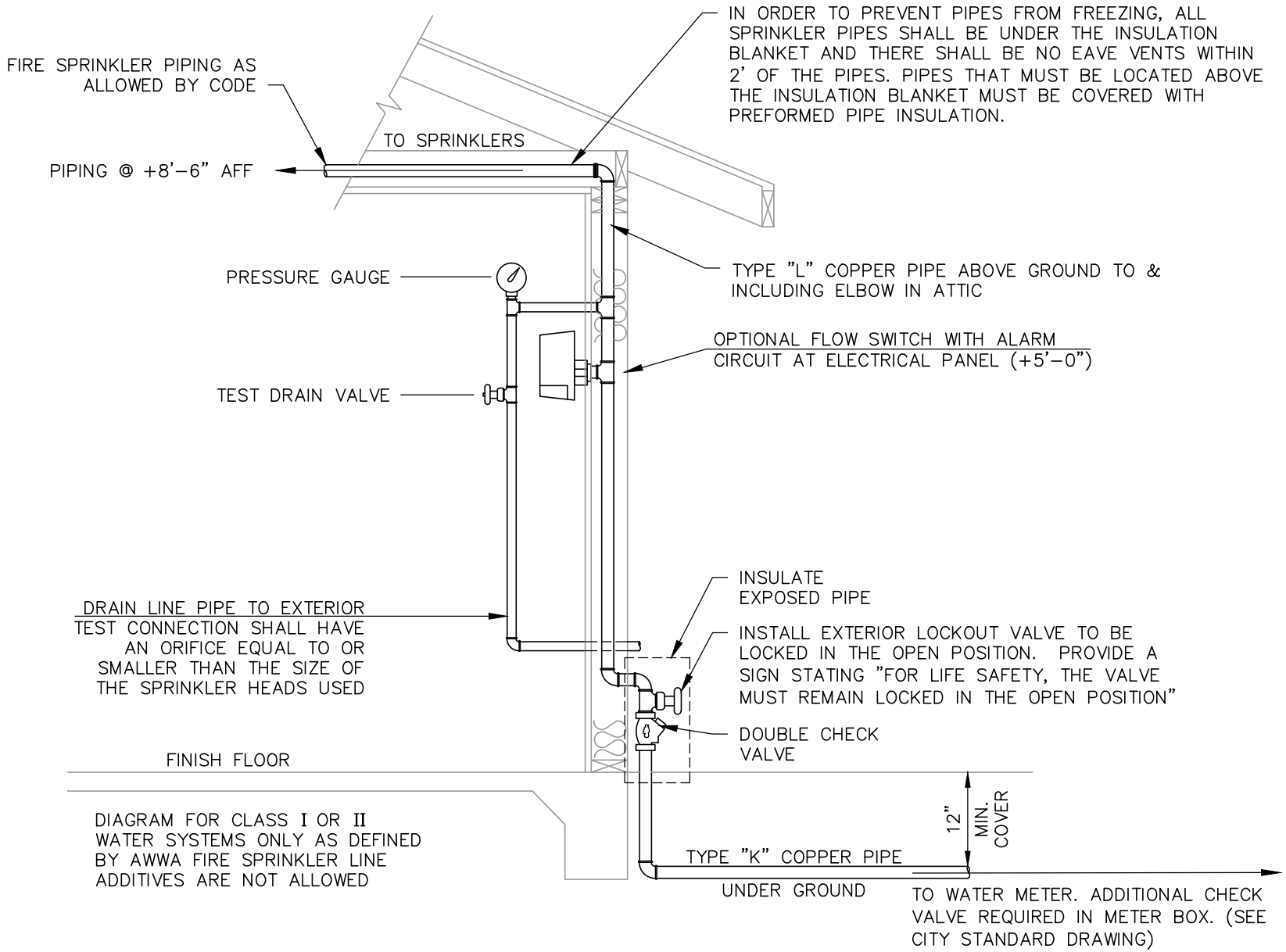

CITY OF WHEATLAND INC. 1874 DEPARTMENT OF PUBLIC WORKS	RESIDENTIAL FIRE RISER DETAIL	SCALE: NONE DATE: AUGUST 2011 DRAWN BY: WJK APPROVED BY: DHS	W-4

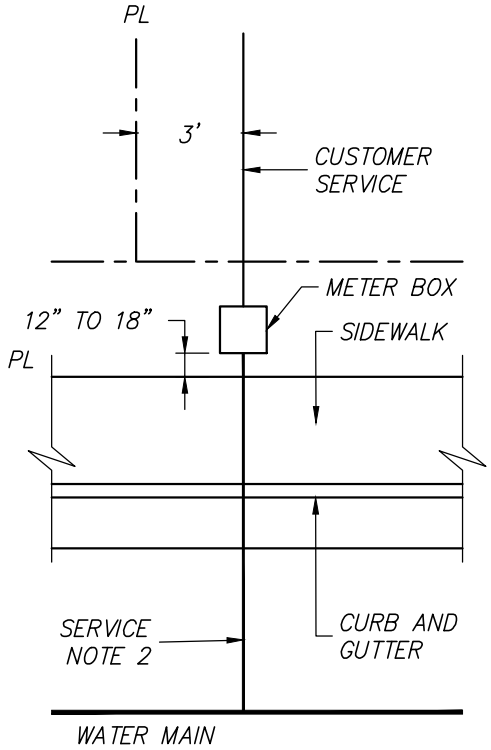

SINGLE SERVICE

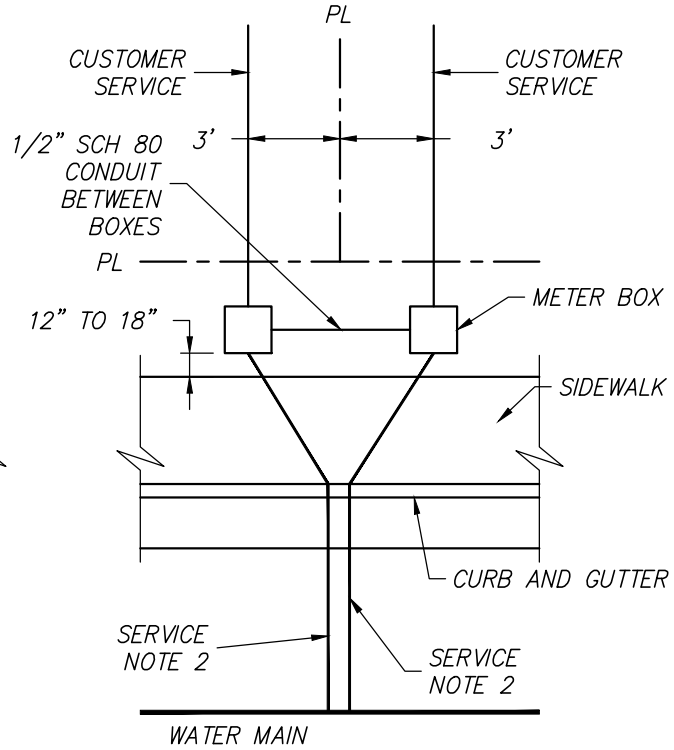

DOUBLE SERVICE

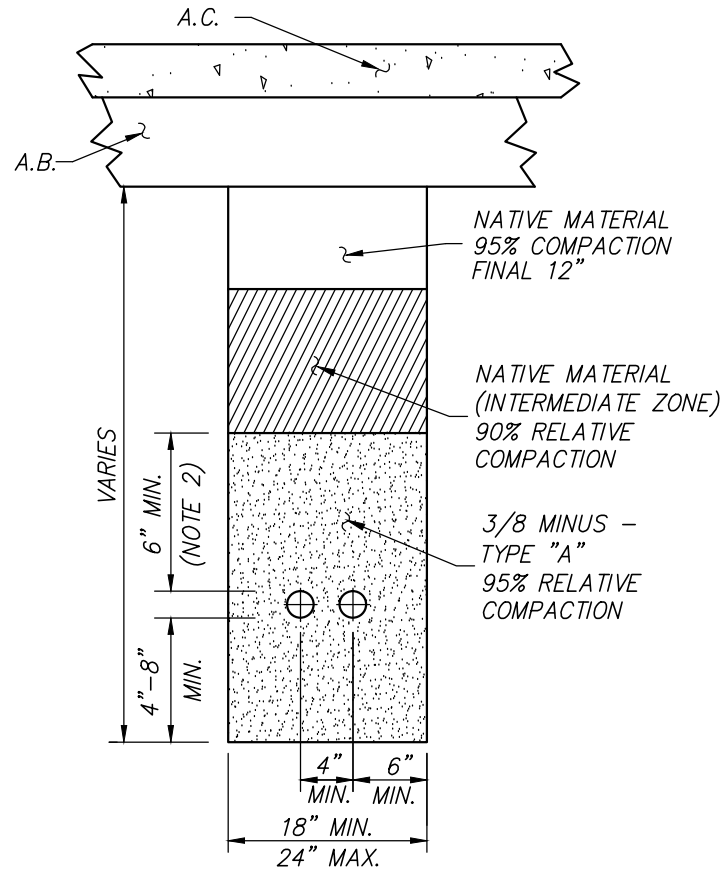

WATER SERVICE TRENCH

WATER SERVICE NOTES:

1. METER SIZE SHALL BE 1" TO 2".
2. SERVICE PIPE AND COUPLINGS PER MATERIALS LIST, INCLUDING TOUCH PAD AND REMOTE UNIT (REFER TO DETAIL W–3).
3. METER BOXES SHALL BE PER MATERIALS LIST, (REFER TO DETAIL W–3).
4. METER BOXES SHALL HAVE CONCRETE BOLT DOWN LIDS (STEEL TRAFFIC LIDS IN DRIVEWAYS OR AREAS WITH ROLL CURB) SEE MATERIALS LIST, DETAIL W–3.
5. SADDLES PER MATERIALS LIST, (REFER TO DETAIL W–2).
6. METER BOXES AND SERVICE PIPING SHALL BE INSTALLED WITH A MINIMUM OF 3' CLEARANCE FROM ALL ELECTRICAL TRANSFORMERS, LIGHT STANDARDS AND OTHER UTILITY BOXES OR VAULTS.

WATER SERVICE TRENCH NOTES:

1. DEPTH OF BEDDING TO VARY UPON EXISTING SOIL CONDITIONS PER APPROVAL OF CITY.
2. 12" MIN. IF TYPE "D" MATERIAL IS USED WITHIN INTERMEDIATE ZONE. TYPE "D" MATERIAL TO BE APPROVED BY SOILS ENGINEER AND CITY ENGINEER.

CITY OF WHEATLAND INC. 1874 — DEPARTMENT OF PUBLIC WORKS	RESIDENTIAL WATER SERVICE LOCATION	SCALE: NONE DATE: AUGUST 2011 DRAWN BY: GF/LM APPROVED BY: DHS	W–5

NOTES:

1. NO WATER IS TO BE DRAWN THROUGH THE BACKFLOW PREVENTION DEVICE UNTIL THE OWNER HAS HAD IT TESTED BY A CERTIFIED TESTER, THE ORIGINAL CERTIFICATE HAS BEEN PRESENTED TO THE CITY, AND THE CITY WATER DEPARTMENT HAS ACCEPTED THE INSTALLATION.
2. THE BACKFLOW PROTECTION DEVICE SHALL BE INSULATED WITH A CITY APPROVED FREEZE PROTECTION BAG FROSTGUARD R13 OR APPROVED EQUAL.
3. WATER METER SHALL BE INSTALLED PER MANUFACTURER'S RECOMMENDATIONS.
4. INSTALL CONCRETE BLOCKING (4" X 4" X 15-1/2" SOLID SLUMP BLOCK) UNDER PERIMETER OF UTILITY BOX.
5. BURIED PIPE AND FITTINGS SHALL BE WRAPPED WITH 6 MIL POLYETHYLENE OR APPROVED EQUAL.
6. TYPE "K" COPPER PIPE MAY BE AQUA POLYETHYLENE COATED (KAMCO) PIPE.
7. ALL PLUMBING CONNECTIONS BETWEEN DISSIMILAR METALS SHALL INCLUDE DIELECTRIC INSULATING FITTINGS TO PREVENT GALVANIC CORROSION.
8. OWNER TO PURCHASE REMOTE TRANSMITTER (SEE ITEM 4 BELOW) FOR LATER INSTALLATION BY CITY.
9. ALL BRASS OR BRONZE PIPE OR FITTINGS TO BE DOMESTIC RATED FOR MINIMUM 200 PSI, OR APPROVED EQUAL.
10. TEFLON WRAP ALL THREADED COUPLINGS.
11. METERS SHALL NOT BE INSTALLED WITHIN DRIVEWAYS.
12. ALL BRASS COMPONENTS SHALL BE LOW LEAD.

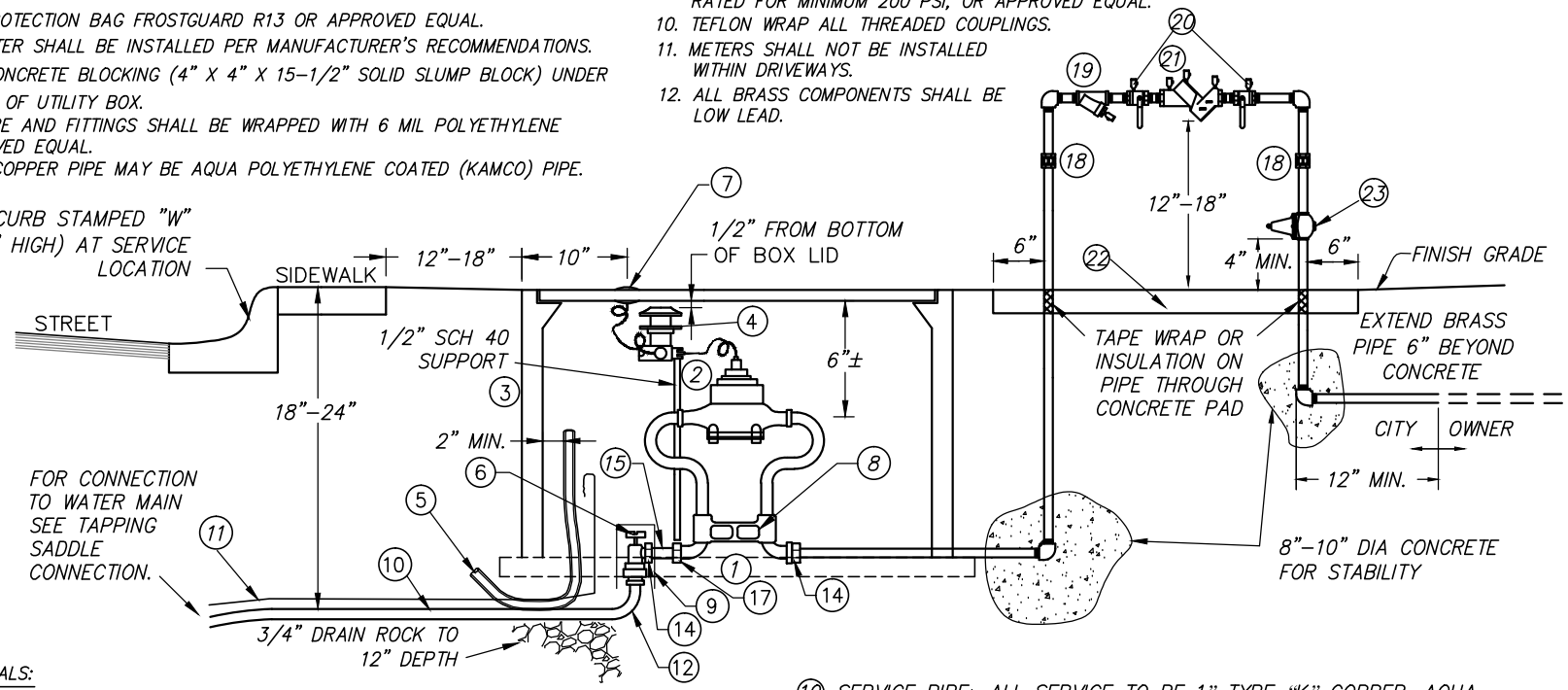

BILL OF MATERIALS:

1. METER RESETTER: 12-INCH MUELLER COPPER METER YOKE WITH HORIZONTAL INLET AND OUTLET, MODEL NUMBER H-1430N, OR APPROVED EQUAL.
2. WATER METER: SENSUS IPERL (1-INCH), 10-3/4" LL METER WITH AMR SYSTEM, OR APPROVED EQUIVALENT.
3. METER BOX: CHRISTY MODEL N36BOX, WITH EXTENSION MODEL B36x12 OR APPROVED EQUAL (WITH BOLT DOWN LID, WITH 1-3/4" ROUND OPENINGS FOR TOUCH PAD IN COVER).
4. REMOTE TRANSMITTER: SENSUS MODEL 520R MXU.
5. CONNECTION CONDUIT: 1/2" SCH. 80 CONDUIT TO BE INSTALLED BY CONTRACTOR TO CONNECT MULTIPLE METERS. COVER BOTH ENDS WITH TAPE TO PREVENT DIRT INTRUSION
6. VALVE: MUELLER P-24274N, OR APPROVED EQUIVALENT. PACK JOINT COMPRESSION X F.I.P. WITH LOCK WING.
7. TOUCH PAD LID: TOUCH READ PAD LID, INCLUDED WITH METER, SEE ITEM 2 ABOVE.
8. BRACING: SCH. 40 PVC PIPE THROUGH BRACING EYE.
9. VALVE RISER: 6" TO 8" SCH. 40 PVC NOTCHED AROUND PIPE SUPPORTED BY CONCRETE BLOCKING ON EACH SIDE.
10. SERVICE PIPE: ALL SERVICE TO BE 1" TYPE "K" COPPER, AQUA POLYETHYLENE COATED (KAMCO) OR CTS POLYETHYLENE (PE)
11. TRACING WIRE: 310 INSULATED
12. RADIUS = 18" MINIMUM
13. NOT USED
14. BRASS UNION: 1 INCH
15. BRASS NIPPLE: 1" DIAMETER, 5" LONG
16. NOT USED
17. BRASS COUPLER: 1 INCH
18. INSTALL (2) UNIONS NOT CONNECTED TO PRESSURE REGULATOR.
19. BRASS STRAINER.
20. BALL VALVES
21. R.P. TYPE BACKFLOW PROTECTION DEVICE: FROM STATE DEPT. OF HEALTH SERVICES APPROVED LIST.
22. CONCRETE PAD: 24" WIDE 4" THICK AND EXTENDING 6" BEYOND THE PIPING ON EITHER END.
23. PRESSURE REGULATOR - ALL BRASS (OPTIONAL).

CITY OF WHEATLAND INC. 1874 DEPARTMENT OF PUBLIC WORKS	COMMERCIAL/INDUSTRIAL WATER SERVICE (1")	SCALE: NONE DATE: AUGUST 2011 DRAWN BY: LM APPROVED BY: DHS	W-6

NOTES:

1. NO WATER IS TO BE DRAWN THROUGH THE BACKFLOW PREVENTION DEVICE UNTIL THE OWNER HAS HAD IT TESTED BY A CERTIFIED TESTER, THE ORIGINAL CERTIFICATE HAS BEEN PRESENTED TO THE CITY, AND THE CITY WATER DEPARTMENT HAS ACCEPTED THE INSTALLATION.
2. THE BACKFLOW PROTECTION DEVICE SHALL BE INSULATED WITH A CITY APPROVED FREEZE PROTECTION BAG, FROSTGUARD R13 OR APPROVED EQUAL.
3. WATER METER SHALL BE INSTALLED PER MANUFACTURER'S RECOMMENDATIONS.
4. INSTALL CONCRETE BLOCKING (4" X 4" X 15 1/2" SOLID SLUMP BLOCK) UNDER PERIMETER OF UTILITY BOX.
5. BURIED PIPE AND FITTINGS SHALL BE WRAPPED WITH 6 MIL POLYETHYLENE OR APPROVED EQUAL.
6. TYPE "K" COPPER PIPE MAY BE AQUA POLYETHYLENE COATED (KAMCO) PIPE.
7. ALL PLUMBING CONNECTIONS BETWEEN DISSIMILAR METALS SHALL INCLUDE DIELECTRIC INSULATING FITTINGS TO PREVENT GALVANIC CORROSION.
8. OWNER TO PURCHASE REMOTE TRANSMITTER (SEE ITEM 4 BELOW) FOR LATER INSTALLATION BY CITY.
9. ALL BRASS OR BRONZE PIPE OR FITTINGS TO BE DOMESTIC RATED FOR MINIMUM 200 PSI, OR APPROVED EQUAL.
10. TEFLON WRAP ALL THREADED COUPLINGS.
11. METERS SHALL NOT BE INSTALLED WITHIN DRIVEWAYS.
12. ALL BRASS COMPONENTS SHALL BE LOW LEAD.

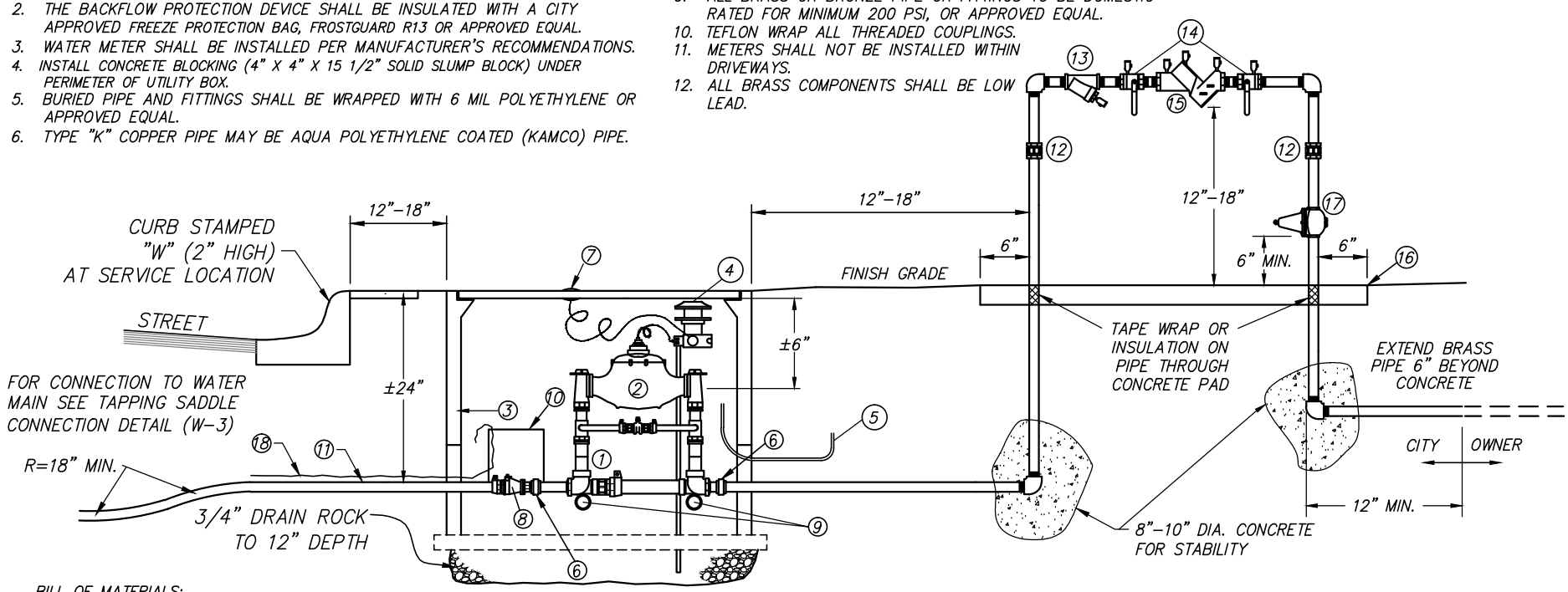

BILL OF MATERIALS:

1. METER RESETTER: 18–INCH MUELLER COPPER METER YOKE WITH HORIZONTAL INLET AND OUTLET AND ELEVATED BYPASS, WITH LOCK WING GROUND KEY ANGLE METER VALVE WITH METER FLANGE X LOCK WING GROUND KEY VALVE WITH METER FLANGE. ELEVATED BY–PASS WITH MUELLER BALL VALVE WITH LOCKING DEVICE, WITH F.I.P. FEMALE INLET AND OUTLET CONNECTIONS, AND WITH BRACING EYES. MUELLER MODEL (1 1/2" OR 2") H–1423–99000N OR APPROVED EQUAL.
2. WATER METER: 1–1/2" WATER METER TO BE MEULLER MVR100 9" COMPACT WITH 1–1/2" BRASS NIPPLES AT EACH END AS REQUIRED FOR YOKE CONNECTION. 2" METER TO BE MEULLER MVR160 10–1/2" COMPACT WITH 2" BRASS NIPPLES AT EACH END AS REQUIRED FOR YOKE CONNECTION.
3. METER BOX: CHRISTY MODEL B40, WITH EXTENSION MODEL B40x10 (W/BOLT DOWN LIDS, WITH 1–3/4" ROUND OPENINGS FOR TOUCH PAD IN COVER) OR APPROVED EQUAL. IN AREAS SUBJECT TO TRAFFIC, BOX & LID TO BE H–20 RATED.
4. REMOTE TRANSMITTER: SENSUS MODEL 520R MXU.
5. CONNECTION CONDUIT: ½" SCH 80 CONDUIT TO BE INSTALLED BY CONTRACTOR TO CONNECT MULTIPLE METERS (SEE DETAIL W–7). COVER BOTH ENDS W/TAPE TO PREVENT DIRT INTRUSION.
6. BRASS UNION: 1–1/2" OR 2" UNION WITH 1–1/2" OR 2" BY 2" BRASS NIPPLE.
7. TOUCH PAD: TOUCH READ PAD LID INCLUDED WITH METER, SEE ITEM 2 ABOVE.
8. CURB STOP: MUELLER P–25122N BALL CURB VALVE (1 1/2" OR 2") (INLET: CTS x OUTLET: M.I.P) OR APPROVED EQUAL.
9. BRACING: SCH 40 P.V.C. PIPE THROUGH BRACING EYE
10. VALVE RISER: 6" SCH 40 P.V.C., NOTCHED AROUND PIPE, SUPPORTED BY CONCRETE BLOCKING EACH SIDE.
11. COPPER PIPE: ALL SERVICE TO BE 1 1/2" OR 2" TYPE "K" COPPER, AQUA POLYETHYLENE COATED (KAMCO), OR CTS POLYETHYLENE (PE). (SEE W–2).
12. INSTALL (2) UNIONS NOT CONNECTED TO PRESSURE REGULATOR.
13. BRASS STRAINER.
14. BALL VALVES
15. R.P. TYPE BACKFLOW PROTECTION DEVICE: FROM STATE DEPT. OF HEALTH SERVICES APPROVED LIST.
16. CONCRETE PAD: 24" WIDE 4" THICK AND EXTENDING 6" BEYOND THE PIPING ON EITHER END.
17. PRESSURE REGULATOR – ALL BRONZE (OPTIONAL).
18. 310 INSULATED TRACING WIRE (SEE DETAIL W–2.)

CITY OF WHEATLAND INC. 1874 DEPARTMENT OF PUBLIC WORKS	COMMERCIAL WATER SERVICE (1–1/2", 2")	SCALE: NONE DATE: AUGUST 2011 DRAWN BY: LM APPROVED BY: DHS	W–7

NOTES:

1. NO WATER IS TO BE DRAWN THROUGH THE BACKFLOW PREVENTION DEVICE UNTIL THE OWNER HAS HAD IT TESTED BY A CERTIFIED TESTER, THE ORIGINAL CERTIFICATE HAS BEEN PRESENTED TO THE CITY, AND THE CITY WATER DEPARTMENT HAS ACCEPTED THE INSTALLATION.
2. THE BACKFLOW PROTECTION DEVICE SHALL BE INSULATED WITH A CITY APPROVED LOCKABLE FREEZE PROTECTION BAG, FROSTGUARD R13 OR APPROVED EQUAL.
3. WATER METER SHALL BE INSTALLED PER MANUFACTURER'S RECOMMENDATIONS.
4. INSTALL CONCRETE BLOCKING (4" X 4" X 15-1/2" SOLID SLUMP BLOCK) UNDER PERIMETER OF UTILIT BOX, AND UNDER METER.
5. BURIED PIPE AND FITTINGS SHALL BE WRAPPED WITH 6 MIL POLYETHYLENE OR APPROVED EQUAL.
6. TYPE "K" COPPER PIPE MAY BE AQUA POLYETHYLENE COATED (KAMCO) PIPE.
7. ALL PLUMBING CONNECTIONS BETWEEN DISSIMILAR METALS SHALL INCLUDE DIELECTRIC INSULATING FITTINGS TO PREVENT GALVANIC CORROSION.
8. OWNER TO PURCHASE REMOTE TRANSMITTER (SEE ITEM 3 BELOW) FOR LATER INSTALLATION BY CITY.
9. ALL BRASS OR BRONZE PIPE OR FITTINGS TO BE DOMESTIC RATED FOR MINIMUM 200 PSI, OR APPROVED EQUAL.
10. TEFLON WRAP ALL THREADED COUPLINGS.

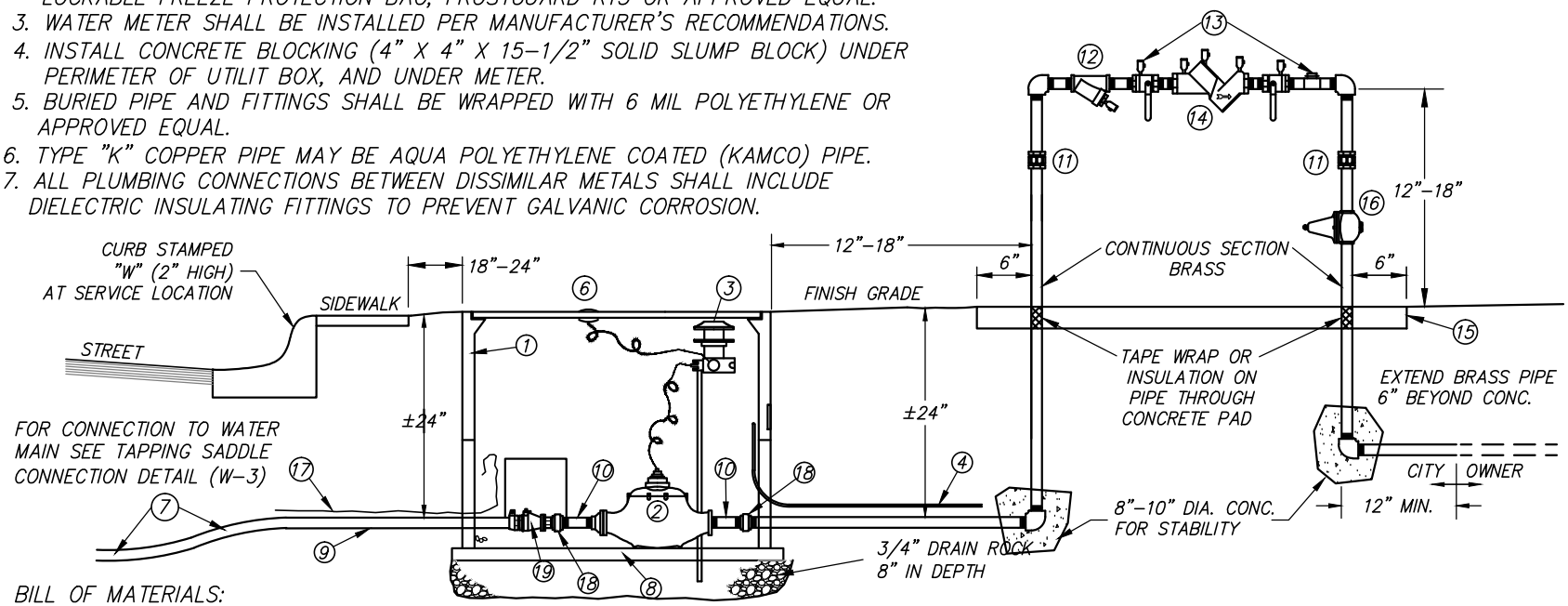

BILL OF MATERIALS:

1. METER BOX: CHRISTY MODEL N30 BOX, WITH EXTENSION MODEL B30x12, OR APPROVED EQUAL. WITH BOLT DOWN LID, WITH 1-3/4" ROUND OPENINGS FOR TOUCH PAD ON COVER.
2. WATER METER: 1-1/2" WATER METER TO BE MEULLER MVR100 9" COMPACT. 2" METER TO BE MEULLER MVR160 10-1/2" COMPACT.
3. REMOTE TRANSMITTER: SENSUS MODEL 520R MXU.
4. CONNECTION CONDUIT: ½" SCH 80 CONDUIT TO BE INSTALLED BY CONTRACTOR TO CONNECT MULTIPLE METERS (SEE DETAIL W-7)
5. NOT USED.
6. TOUCH PAD: TOUCH READ PAD LID. INCLUDED WITH METER, SEE ITEM 1 ABOVE.
7. R=18" MIN.
8. CONCRETE BLOCKING PERIMETER OF METER BOX AND UNDER METER.
9. SERVICE PIPE; ALL SERVICE TO BE 1-½" OR 2" TYPE "K" COPPER, AQUA POLYETHYLENE COATED (KAMCO), OR CTS POLYETHYLENE (PE). (SEE W-2).
10. BRASS NIPPLE: 1-1/2" OR 2"
11. INSTALL (2) UNIONS NOT CONNECTED TO PRESSURE REGULATOR.
12. BRASS STRAINER.
13. BALL VALVES
14. R.P. TYPE BACKFLOW PROTECTION DEVICE: FROM STATE DEPT. OF HEALTH SERVICES APPROVED LIST.
15. CONCRETE PAD: 24" WIDE 4" THICK AND EXTENDING 6" BEYOND THE PIPING ON EITHER END.
16. PRESSURE REGULATOR ALL BRASS (OPTIONAL).
17. 310 INSULATED TRACING WIRE (SEE DETAIL W-2)
18. BRASS UNION: 1-1/2" OR 2" BRASS UNION.
19. CURB STOP: MUELLER P-25122N BALL CURB VALVE (1 1/2" OR 2") (INLET: CTS x OUTLET: M.I.P) OR APPROVED EQUAL.

CITY OF WHEATLAND INC. 1874 DEPARTMENT OF PUBLIC WORKS	IRRIGATION WATER SERVICE (1-1/2", 2")	SCALE: NONE DATE: AUGUST 2011 DRAWN BY: LM APPROVED BY: DHS	W-8

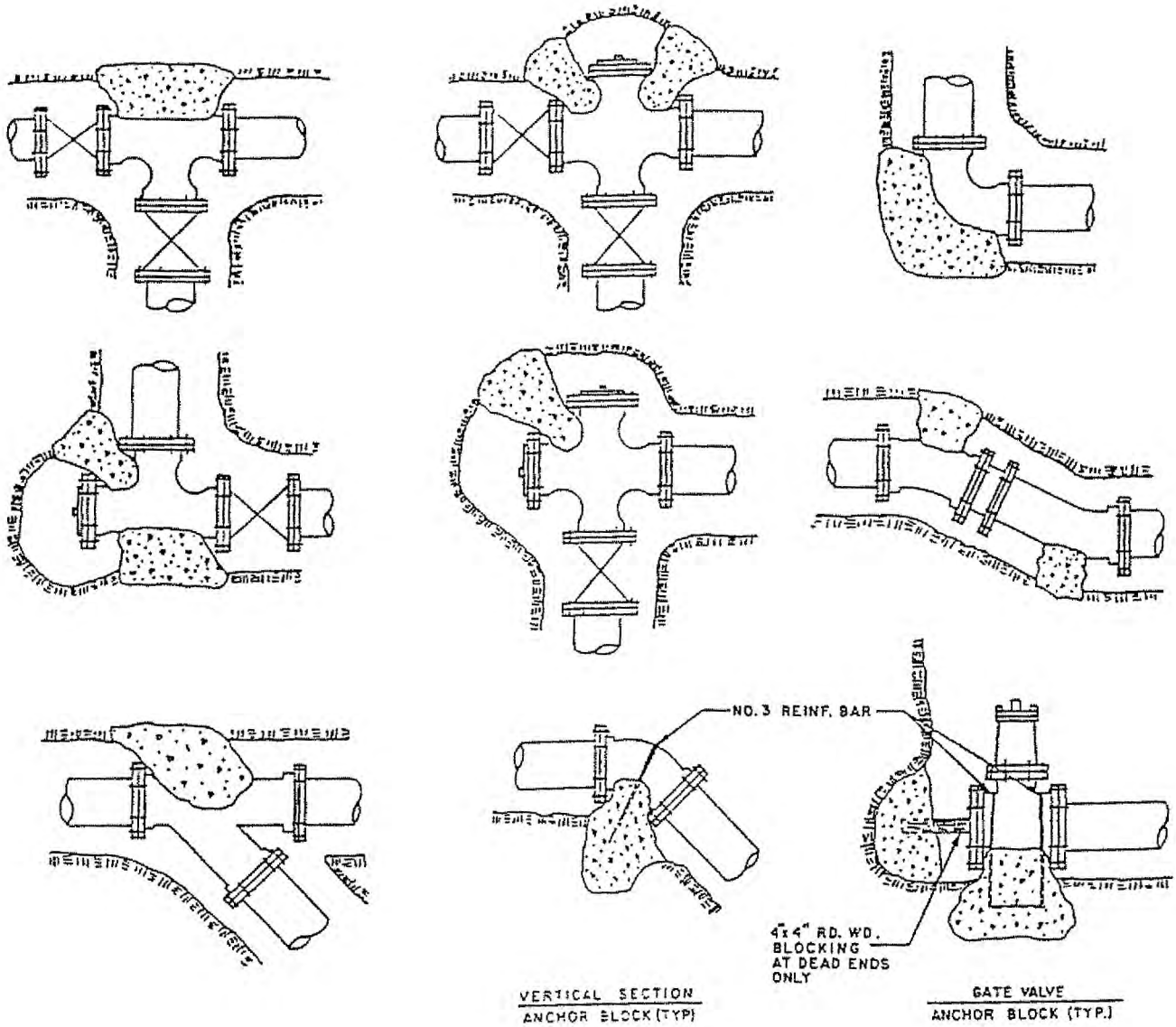

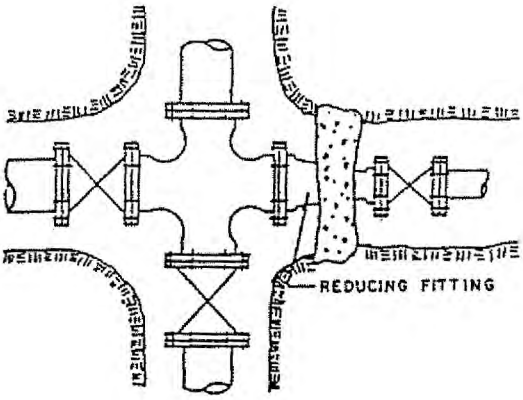

NOTES:

1. THRUST BLOCKS SHALL BE CONSTRUCTED SO THAT THE BEARING SURFACE IS IN A DIRECT LINE WITH THE MAJOR FORCE CREATED BY THE PIPE OR FITTING.
2. ALL CONCRETE SHALL BE CLASS C P.C.C.
3. CONCRETE SHALL BE FLUID ENOUGH SO THAT IT MAY BE WORKED AROUND THE FITTING.
4. CONCRETE SHALL BE KEPT BEHIND THE BELL OF THE FITTING.
5. THRUST BLOCK BEARING SURFACE SHALL BE PLACED AGAINST UNDISTURBED EARTH AND SHALL HAVE A MINIMUM VOLUME OF 6 CU. FT. AND A MINIMUM VERTICAL BEARING AREA OF 4 SQ. FT.
6. A CONCRETE PAD SHALL BE POURED UNDER ALL VALVES 12" OR LARGER, OR AS DIRECTED BY THE ENGINEER.
7. ALL ANCHOR BLOCKS SHALL BE CONSTRUCTED AS SPECIFIED. SIZE OF BLOCK AND NUMBER OF STRAPS TO BE DESIGNED IN EACH SITUATION.
8. ONLY MECHANICAL CLAMPS SHALL BE INSTALLED WITH THE THRUST BLOCKS.

DATE: AUGUST 2011	DRAWN BY: LM	APPROVED BY: DHS	SCALE: NONE

CITY OF WHEATLAND INC. 1874 DEPARTMENT OF PUBLIC WORKS	TYPICAL THRUST BLOCKS AND ANCHOR DETAILS	W-9

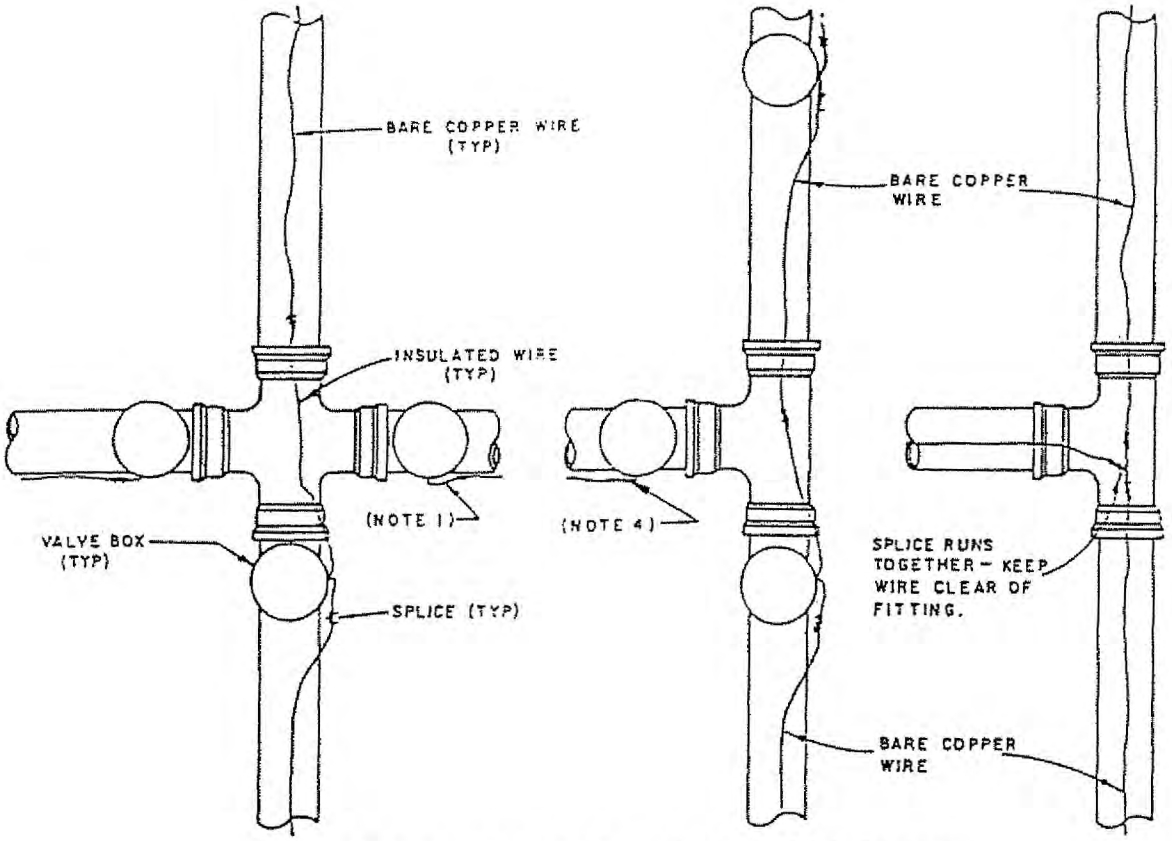

TYPICAL PLACING AT MAIN INTERSECTIONS

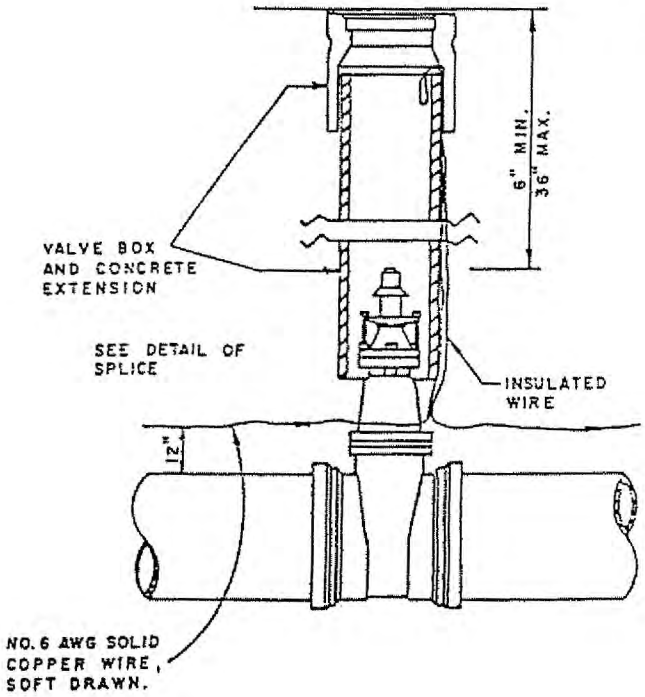

INSTALLATION AT VALVE BOX

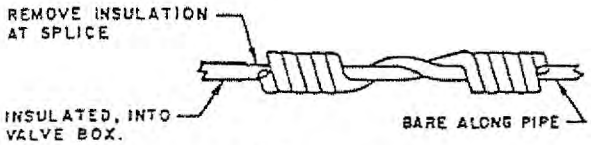

DETAIL OF SPLICE

NOTES:

1. WIRE TO BE CONTINUOUS BETWEEN VALVE BOXES, EXCEPT WHERE BOXES ARE WITHIN 10' OF PIPE INTERSECTION.
2. BARE WIRE NOT TO TOUCH VALVE OR FITTINGS. MAINTAIN 3" CLEAR DISTANCE.
3. LOCATING WIRE TO BE LAID AT THE TOP OF THE PIPE BEDDING ENVELOPE. SEE CITY STD. G3.
4. IF WIRE ENDS AT VALVE BOX, RUN SINGLE INSULATOR LEAD UP TO 1" BELOW BOX COVER.

DATE: AUGUST 2011	DRAWN BY: LM	APPROVED BY: DHS	SCALE: NONE

CITY OF WHEATLAND INC. 1874 DEPARTMENT OF PUBLIC WORKS	LOCATING WIRE FOR NONMETALLIC PIPELINES	W–10

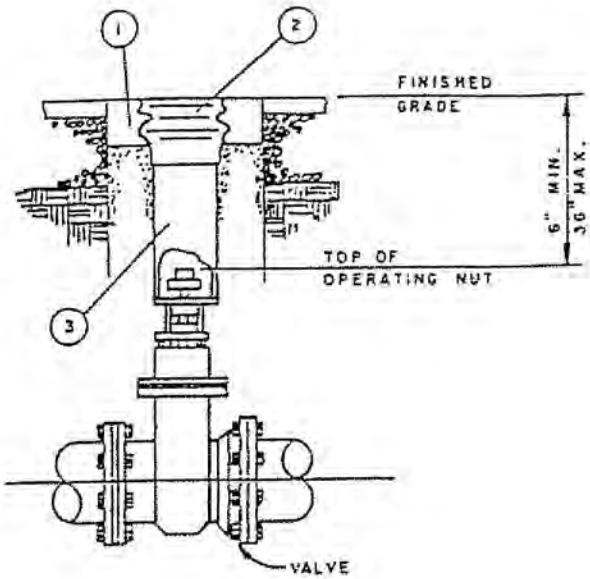

VALVE COVER DETAIL

WHERE DISTANCE BETWEEN FINISHED GRADE AND TOP OF OPERATING NUT IS 36" OR LESS

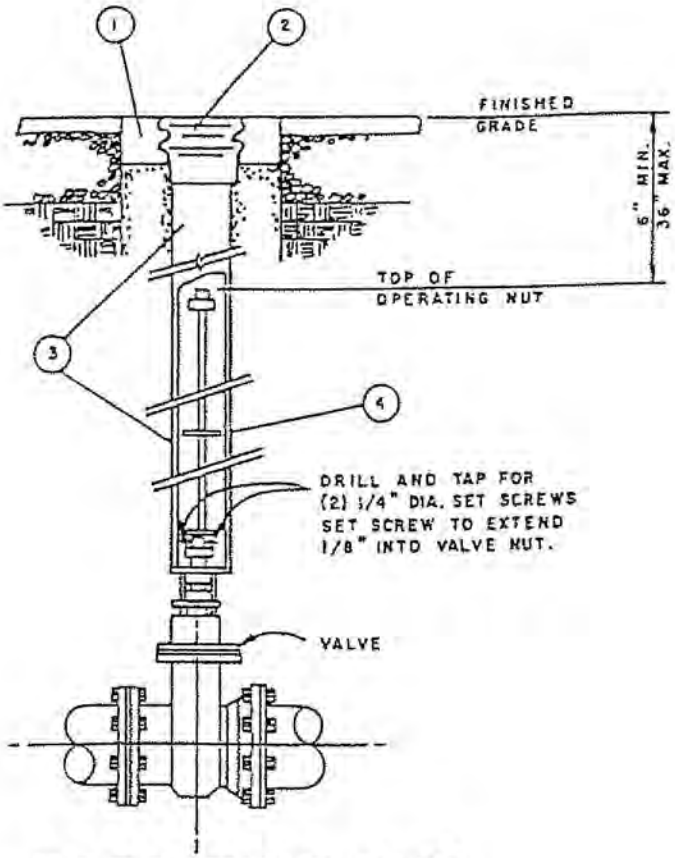

OPERATING NUT EXTENSION DETAIL

REQUIRED WHERE DISTANCE BETWEEN FINISHED GRADE AND TOP OF OPERATING NUT EXCEEDS 36".

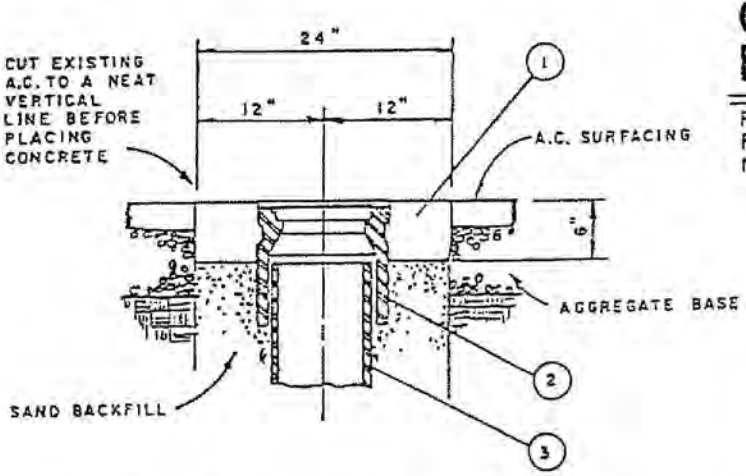

VALVE COVER ADJUSTMENT

NOTES

1. 24" DIA. X 6" CONCRETE COLLAR.
2. VALVE BOX COVER - BROOKS PRODUCTS (4-TT) OR EQUAL.
3. 8" I.D. CONCRETE PIPE EXTENSION - BROOKS PRODUCTS (4-TT) OR EQUAL.
4. OPERATING NUT EXTENSION W/7" DIA. PLATE WASHER WELDED TO EXTENSION AT MIDPOINT OF ROD. (MIN. LENGTH OF EXTENSION ROD SHALL BE 24")

DATE: AUGUST 2011	DRAWN BY: LM	APPROVED BY: DHS	SCALE: NONE

CITY OF WHEATLAND INC. 1874 DEPARTMENT OF PUBLIC WORKS	VALVE COVER INSTALLATION	W-11

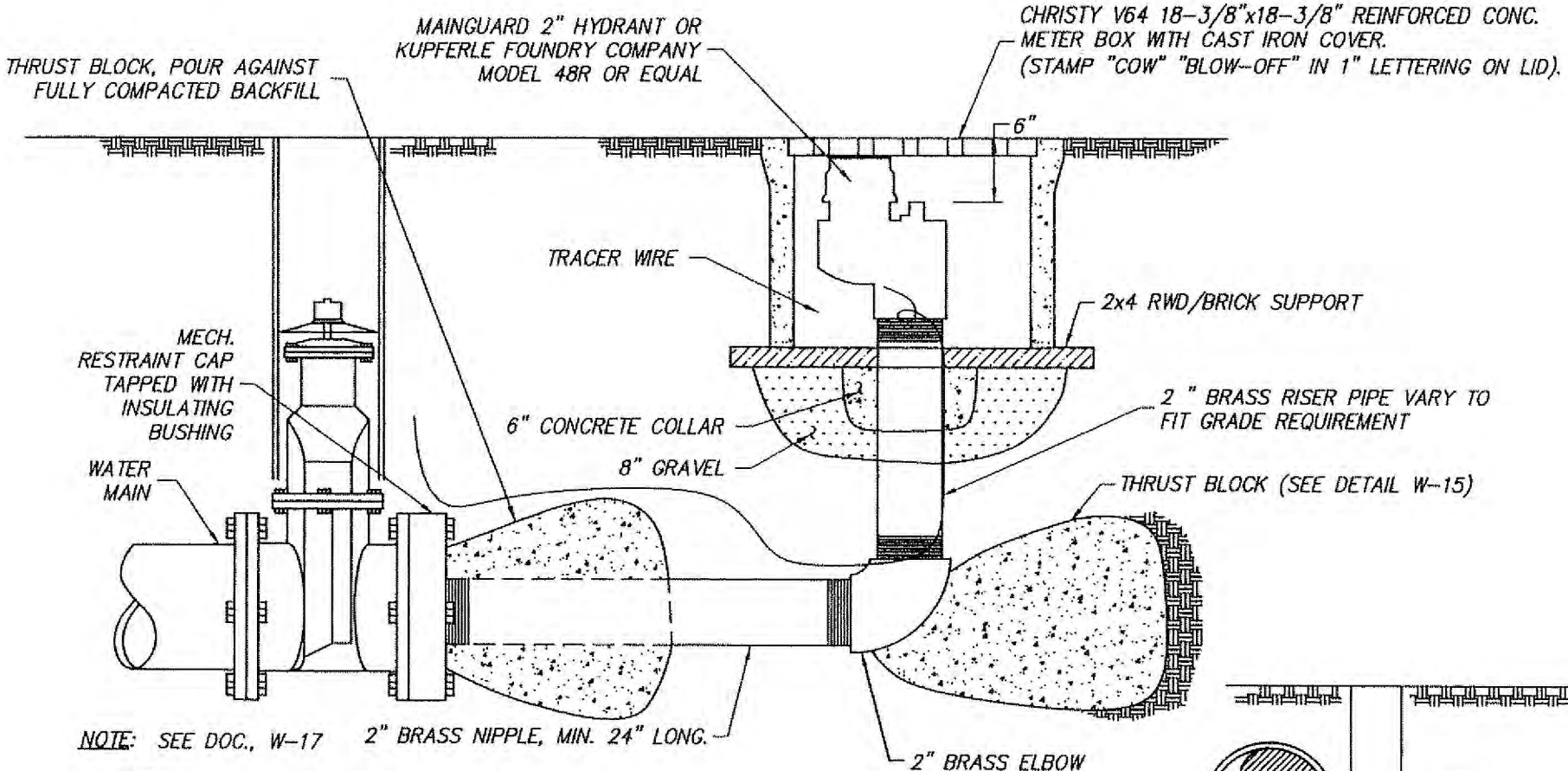

NOTES:

1. CONNECTIONS FOR BLOW OFF VALVES AT SAG POINTS TO BE TEE (PER SAG POINT CONNECTION DETAIL) OR TO BE TAPPED AT THE BOTTOM OF THE MAIN PER DETAIL W-3.
2. ALL PLUMBING CONNECTIONS BETWEEN DISSIMILAR METALS SHALL INCLUDE DIELECTRIC INSULATION FITTINGS TO PREVENT GALVANIC CORROSION.
3. INSTALL 310 INSULATED TRACING WIRE FROM MAIN TO BOV.
4. BURIED METALLIC PIPE AND FITTINGS SHALL BE WRAPPED WITH 6-MIL POLYETHYLENE OR APPROVED EQUAL INCLUDING THE MAIN A MINIMUM OF 12-INCHES EITHER SIDE OF THE CONNECTION.
5. TEFLON WRAP ALL THREADED CONNECTIONS.

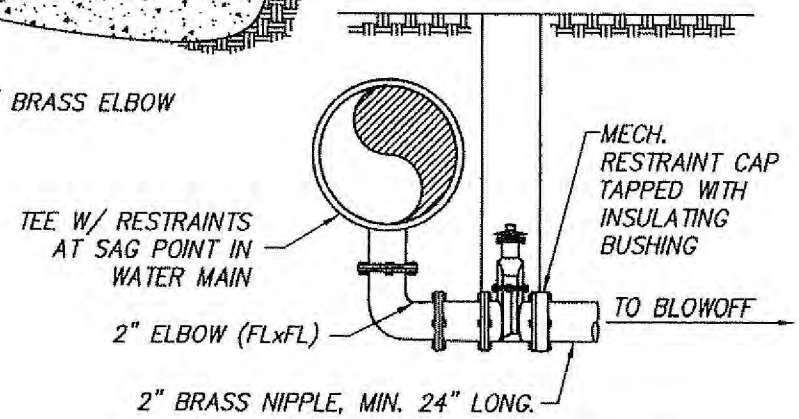

SAG POINT CONNECTION

CITY OF WHEATLAND INC. 1874 DEPARTMENT OF PUBLIC WORKS	2" BLOW OFF VALVE	SCALE: NONE DATE: AUGUST 2011 DRAWN BY: LMM APPROVED BY: DHS	W-12

NOTES:

1. AVRV (AIR/VACCUM RELEASE VALVE) SHALL BE INSTALLED PER MANUFACTURE'S RECOMMENDATIONS.
2. BURIED PIPE AND FITTINGS SHALL BE WRAPPED WITH 6 MIL POLYETHYLENE OR APPROVED EQUAL.
3. TYPE "K" COPPER PIPE MAY BE AQUA POLYETHYLEVE COATED (KAMCO) PIPE.
4. ALL PLUMBING CONNECTIONS BETWEEN DISSIMILAR METALS SHALL INCLUDE DIELECTRIC INSULATING FITTINGS TO PREVENT GALVANIC CORROSION.
5. INSTALL 310 INSULATED TRACING WIRE FROM MAIN TO AVRV ENCLOSURE
6. TEFLON WRAP ALL THREADED COUPLINGS.

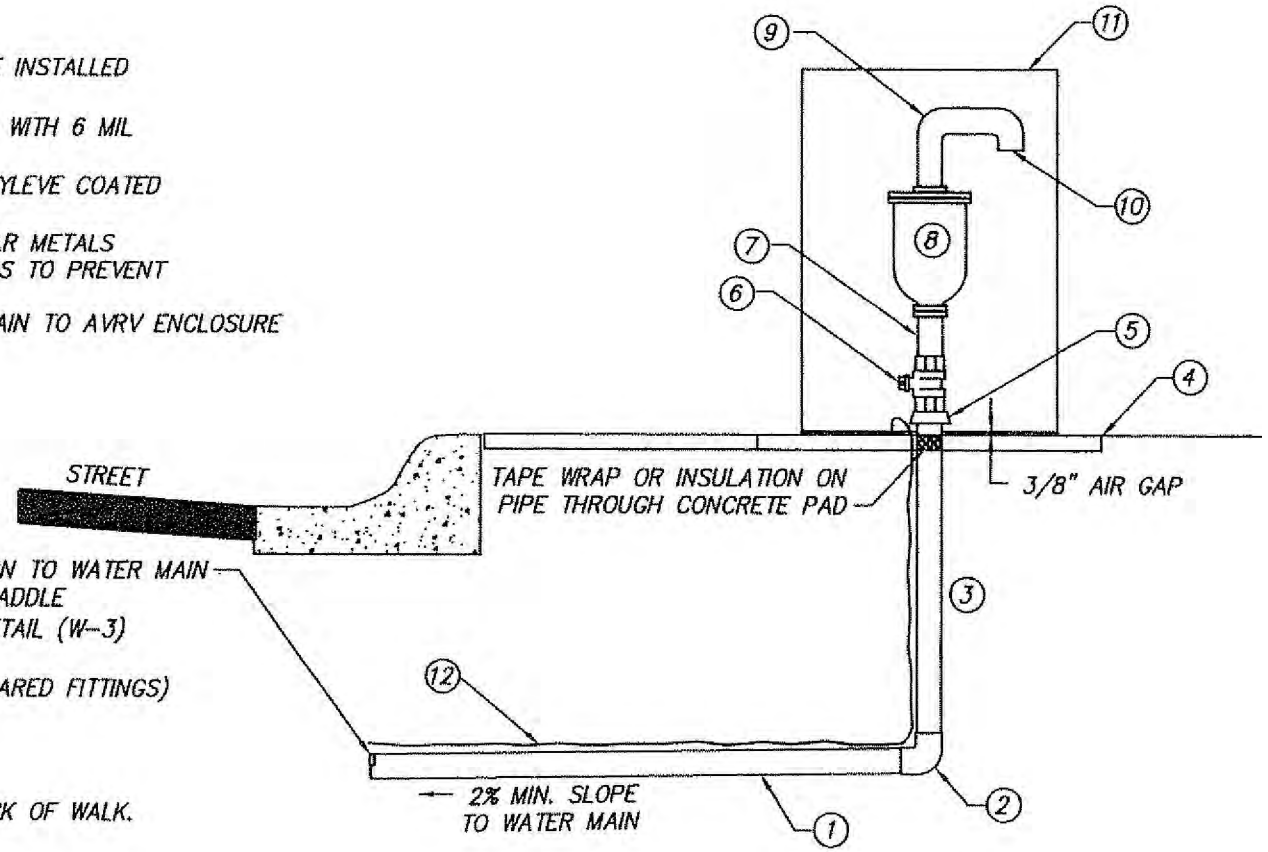

MATERIAL LIST:

1. COPPER PIPE TYPE "K" COPPER, TO BE 1" (FLARED FITTINGS)
2. 1" TYPE "K" COPPER 90° ELBOW.
3. 1" TYPE "K" COPPER TUBING (RIGID).
4. 36"x36"x4" CONCRETE PAD, SLOPE 2% TO BACK OF WALK.
5. ADAPTOR: 1" COPPER TYPE "K" TO M.I.P.
6. 1" BALL VALVE WITH WHEEL HANDLE (F.I.P./F.I.P.) FORD B-11, OR APPROVED EQUAL.
7. 1"x2" BRASS THREADED NIPPLE.
8. 1" DIAMETER COMBINATION AIR VACCUM RELEASE VALVE (AVRV), CRISPIN UNIVERSAL AIR RELEASE VALVE, APCO SERIES 1400 COMBINATION AIR VALVE OR APPROVED EQUAL.
9. 180° ELBOW (GALV. DOUBLE 90° STREET ELLS).
10. SCREEN (FLOW-EZY PIPE MOUNTED SUCTION SCREEN # M-16-8, OR APPROVED EQUAL).
11. 24"x24"x36" AVR ENCLOSURE, PLACER WATERWORKS SJARV, OR APPROVED EQUAL. BOLTED TO CONCRETE PAD PER MANUFACTURER'S RECOMMENDATIONS.
12. TRACING WIRE, SEE NOTE 5 ABOVE.

CITY OF WHEATLAND INC. 1874 DEPARTMENT OF PUBLIC WORKS	COMBINATION AIR/VACUUM 1" RELEASE VALVE	SCALE: NONE DATE: AUGUST 2011 DRAWN BY: LM APPROVED BY: DHS	W-13

NOTES:

1. INSTALL CONCRETE BLOCKING UNDER VALVE BOX.
2. BURIED PIPE AND FITTINGS SHALL BE WRAPPED WITH 6 MIL POLYETHYLENE OR APPROVED EQUAL.
3. TYPE "K" COPPER PIPE MAY BE AQUA POLYETHYLEVE COATED (KAMCO) PIPE.
4. ALL PLUMBING CONNECTIONS BETWEEN DISSIMILAR METALS SHALL INCLUDE DIELECTRIC INSULATING FITTINGS TO PREVENT GALVANIC CORROSION.
5. INSTALL 310 INSULATED TRACING WIRE FROM MAIN TO CURB STOP BOX. PLACE WIRE OUTSIDE THE RISER, BUT INSIDE THE VALVE BOX.
6. INSTALL SAMPLING STATION DOOR FACING TOWARD STREET.
7. LOCATION OF SAMPLING STATION PER CITY ENGINEER.
8. TEFLON WRAP ALL THREADED COUPLINGS.

MATERIAL LIST:

(1) WATER SAMPLE STATION: ECLIPSE NO. 88 SAMPLE STATION BY KUPFERIE FOUNDARY, ST LOUIS, OR APPROVED EQUAL.
(2) 3/4" TYPE "K" COPPER SERVICE LINE
(3) VALVE RISER: 6" SCH 40 P.V.C., NOTCHED AROUND PIPE, SUPPORTED BY CONCRETE BLOCKING EACH SIDE.
(4) CHRISTY TRAFFIC BOX WITH METAL LID
(5) CURB STOP: 3/4" MUELLER P-25172 BALL CURB VALVE (INLET: CTS AND OUTLET: F.I.P.), OR APPROVED EQUAL.
(6) CONCRETE PAD: 24" X 24" X 4" CENTERED AROUND BRASS STANDPIPE.
(7) BRASS STANDPIPE: SUPPLIED WITH SAMPLE STATION BY KUPFERIE FOUNDARY, SEE (1) ABOVE.
(8) TRACING WIRE: SEE NOTE 5, ABOVE
(9) COPPER SAMPLE TUBING: 1/4" COPPER TUBING WITH 1/4" BALL VALVE TO BE SUPPLIED WITH SAMPLE STATION BY KUPFERLE FOUNDARY, SEE (1) ABOVE.
(10) ELBOW: 3/4" BRASS ELBOW (F.I.P.)

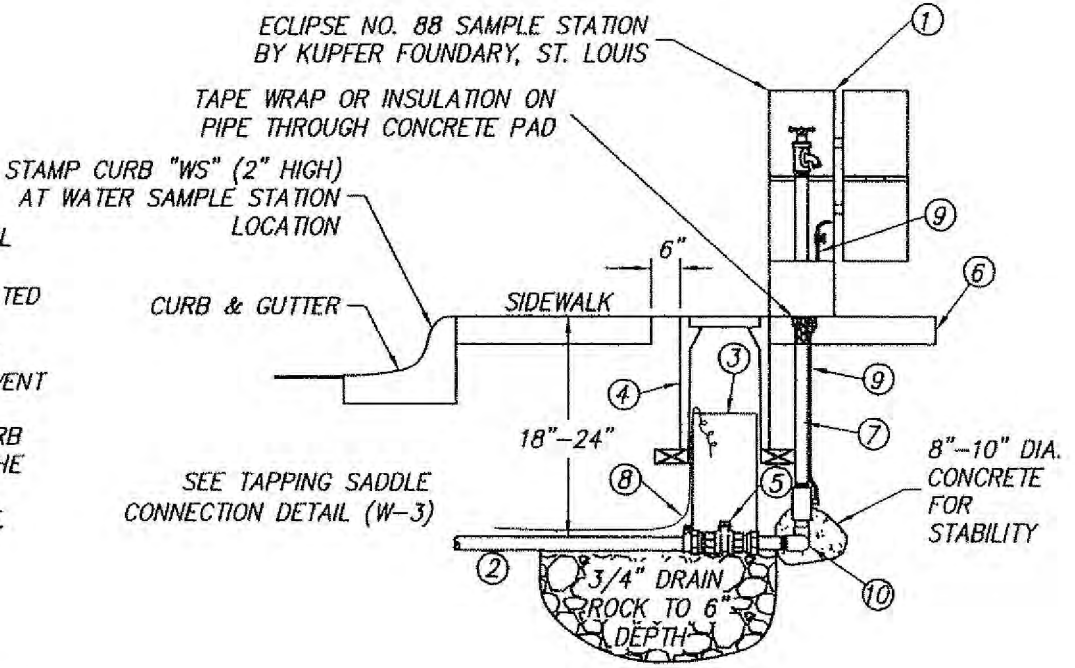

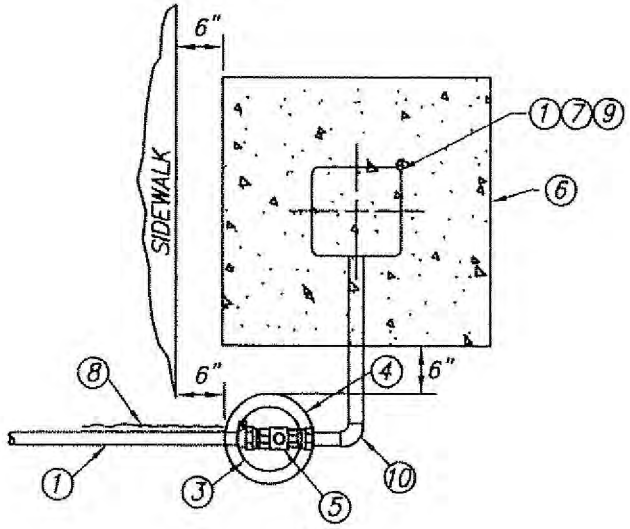

PLAN

CITY OF WHEATLAND INC. 1874 DEPARTMENT OF PUBLIC WORKS	WATER SAMPLING STATION	SCALE: NONE DATE: AUGUST 2011 DRAWN BY: LM APPROVED BY: DHS	W-14

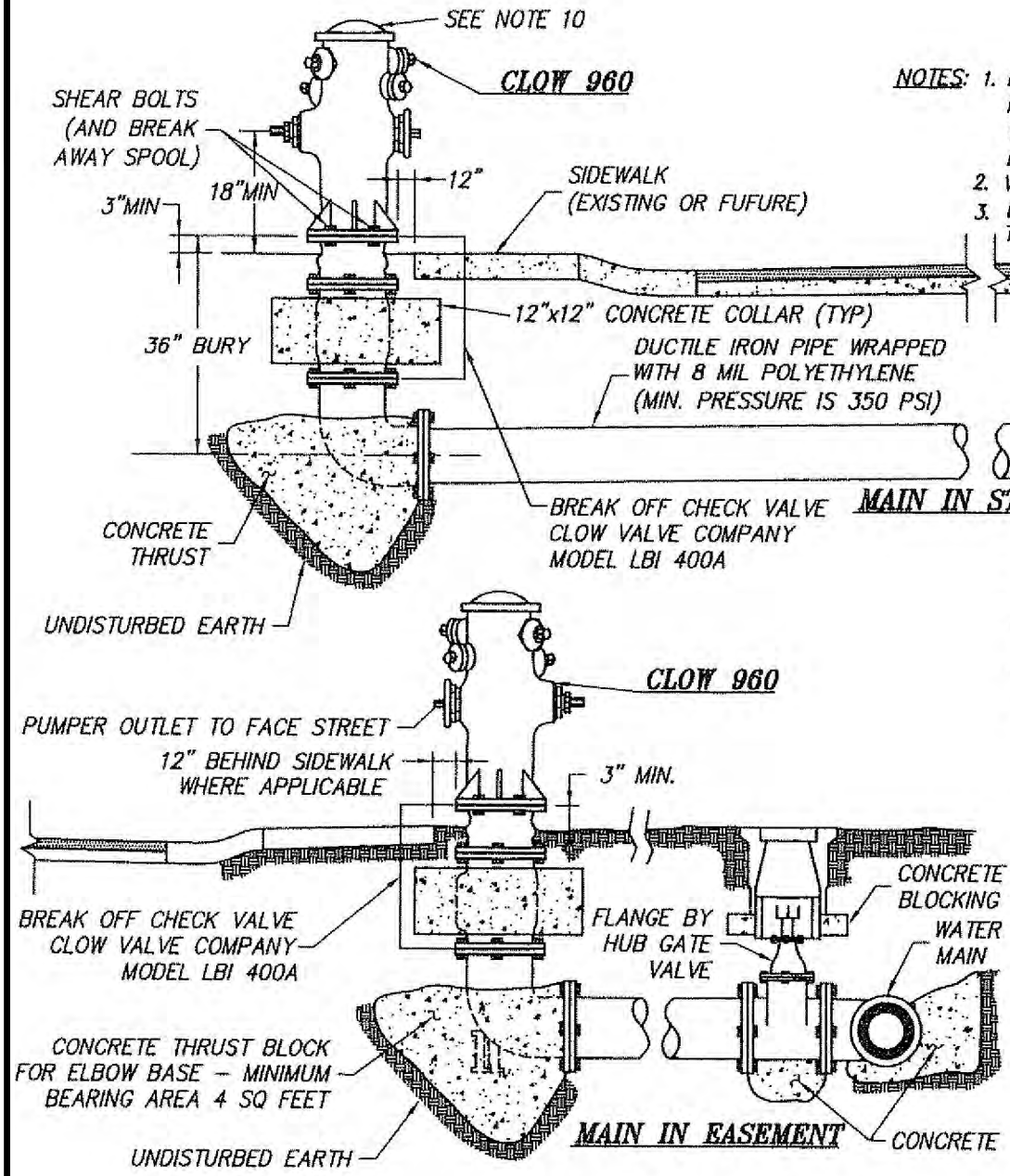

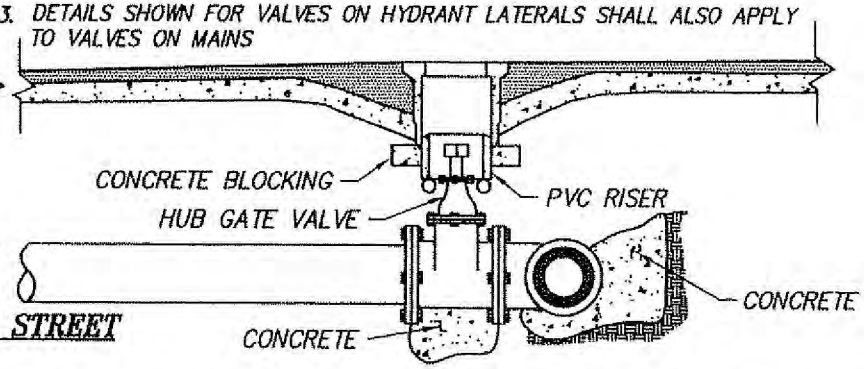

NOTES:

1. LOCATIONS ARE INDICATED FOR TYPICAL RESIDENTIAL PLACEMENT. IN COMMERCIAL AREAS FIRE HYDRANTS SHALL BE PROTECTED FROM VEHICULAR DAMAGE AND ACCESSIBLE TO FIRE PROTECTION EQUIPMENT AND LOCATIONS TO BE APPROVED BY CITY ENGINEER.
2. VALVE BOX TO BE SET ON CONC. OR BRICK COLLER(TYP).
3. DETAILS SHOWN FOR VALVES ON HYDRANT LATERALS SHALL ALSO APPLY TO VALVES ON MAINS
4. LIST OF APPROVED MATERIALS MAY BE OBTAINED FROM DEPT. OF PUBLIC WORKS (TYPES SHOWN FOR ILLUSTRATION ONLY)
5. ALL JOINTS TO BE FLANGED AND OR RESTRAINT AS APPROVED BY CITY ENGINEER.
6. ALL VALVES TO BE WRAPPED W/ 8MIL POLYETHYLENE
7. HYDRANTS SHALL HAVE:
   - IRON CAPS (NOT BRONZE OR PLASTIC)
   - TAMPER-PROOF SECURITY BOLT SECURING HYDRANT HEAD TO THE SPOOL.
8. HYDRANT SHALL BE PAINTED AS FOLLOWS:
   - REMOVE ALL RUST AND CORROSION WITH WIRE BRUSH.
   - APPLY ONE COAT OF RUST-OLEUM FIRE HYDRANT PRIMER GRAY
   - APPLY TWO COATS OF RUST-OLEUM FIRE HYDRANT PAINT, SAFETY YELLOW 2-13 TO HYDRANT BODIES
   - BONNETS AND CAPS SHALL BE PAINTED WITH TWO COATS OF RUST-OLEUM FIRE HYDRANT PAINT USING THE FOLLOWING COLORS: FH RED (FOR HYDRANTS WITH UP TO 500 GPM CAPACITY), SAFETY ORANGE (500-1000 GPM), GREEN (1000-1500 GPM), SAFETY BLUE (1500 & ABOVE), AS DIRECTED BY THE CITY ENGINEER OR WHITE AND MARKED WITH AN "X" USING BLACK ENAMEL PAINT. (FOR FIRE HYDRANT USED AS BLOW-OFF VALVE).
9. INSTALL BLUE REFLECTOR IN STREET PAVEMENT, 6-INCHES FROM THE NEAREST LANG LINE OR THE CENTER LINE OR MEDIAN CURB (ON THE HYDRANT SIDE OF THE STREET) WHICHEVER IS CLOSEST.
10. PAINT CURB RED 15' EITHER SIDE OF FIRE HYDRANT.

CITY OF WHEATLAND INC. 1874 DEPARTMENT OF PUBLIC WORKS	FIRE HYDRANT INSTALLATION	SCALE: NONE DATE: AUGUST 2011 DRAWN BY: LM APPROVED BY: DHS	W-15

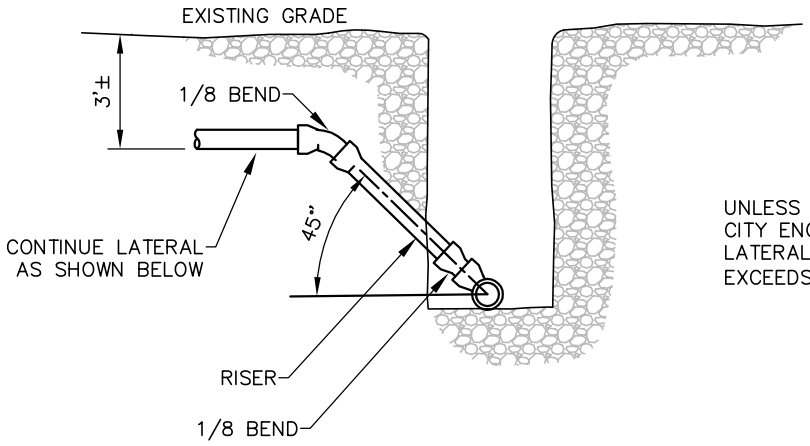

UNLESS OTHERWISE DIRECTED BY THE CITY ENGINEER, INSTALL RISERS FOR LATERALS WHERE DEPTH OF MAIN SEWER EXCEEDS 8'.

RISER DETAIL

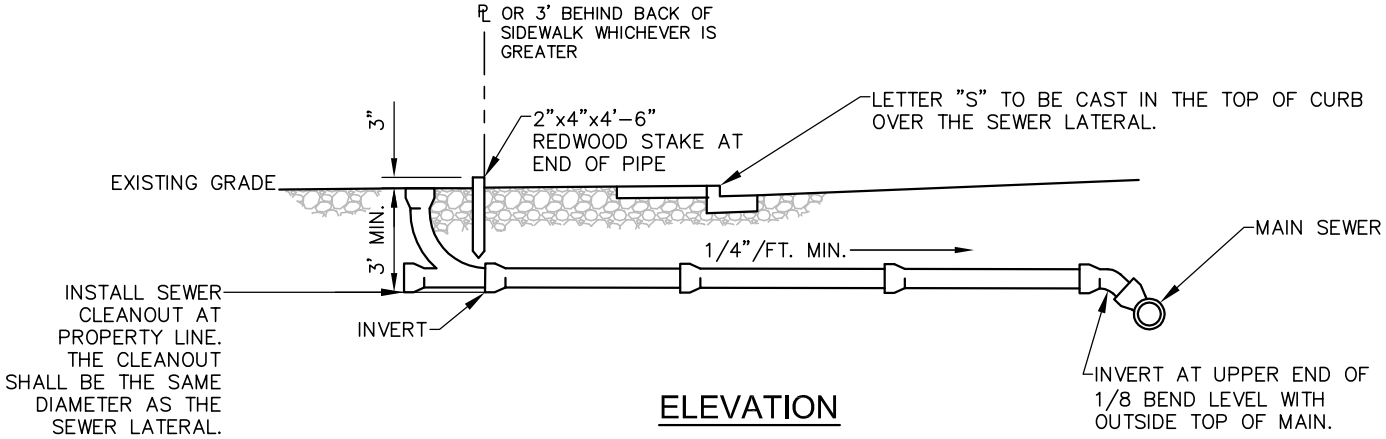

ELEVATION

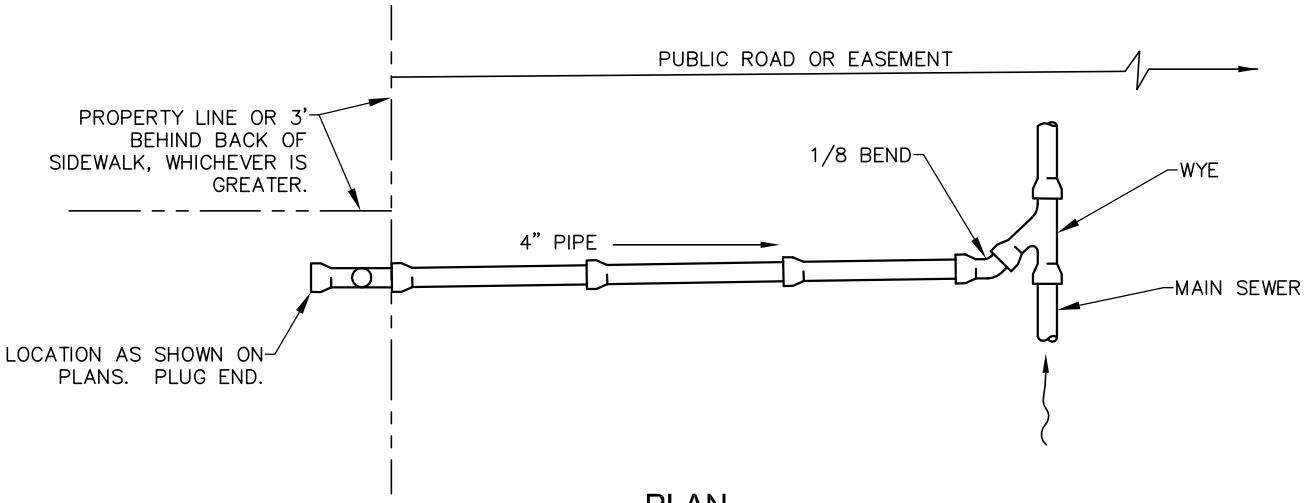

PLAN

REDWOOD STAKES SHALL BE INSTALLED AT THE ENDS OF ALL LATERALS INCLUDING WYES ONLY AND RISER ONLY.

DATE: AUGUST 2011	DRAWN BY: LM	APPROVED BY: DHS	SCALE: NONE

CITY OF WHEATLAND INC. 1874 DEPARTMENT OF PUBLIC WORKS	TYPICAL SEWER LATERAL DETAILS	SS-1

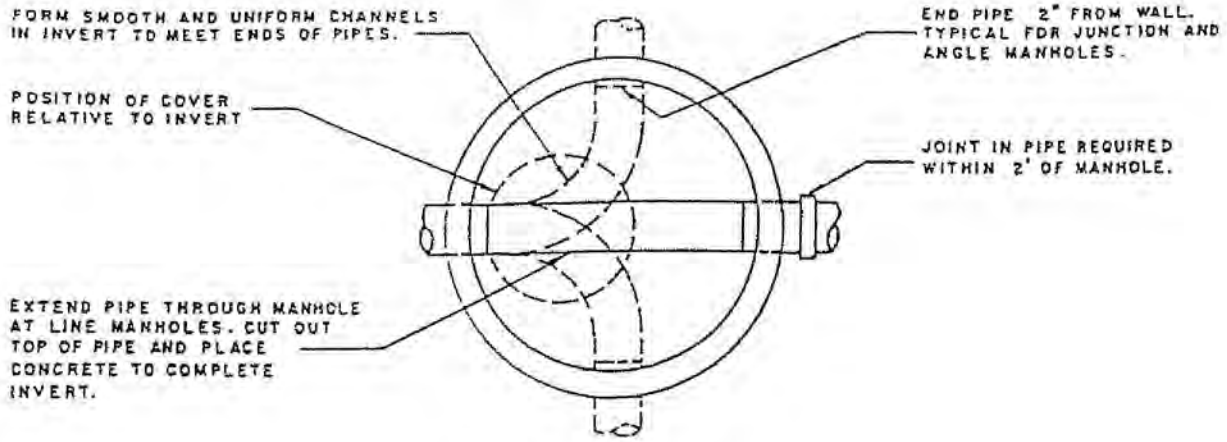

PLAN OF INVERT

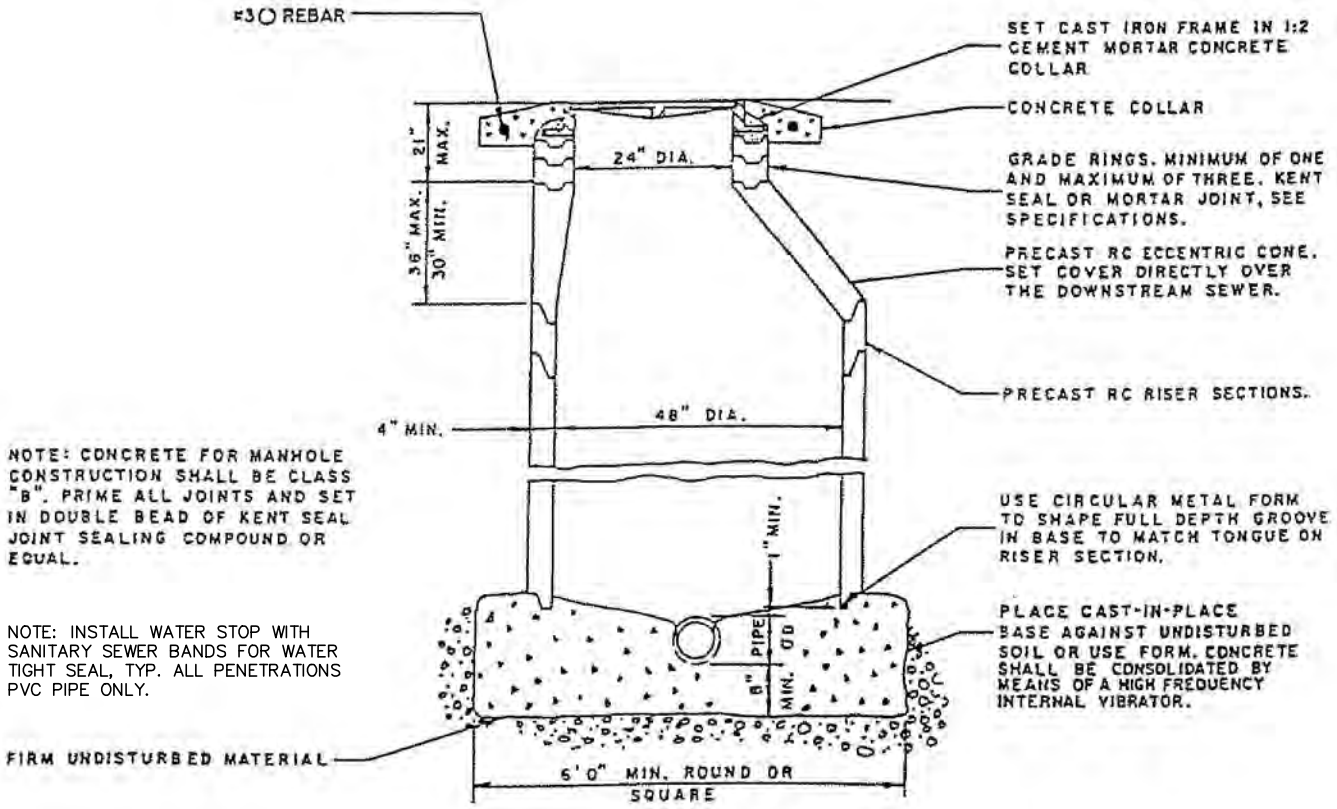

TYPICAL SECTION

INVERT SHOWN ROTATED 90°

DATE: AUGUST 2011	DRAWN BY: LM	APPROVED BY: DHS	SCALE: NONE

CITY OF WHEATLAND INC. 1874 DEPARTMENT OF PUBLIC WORKS	STANDARD MANHOLE	SS-2

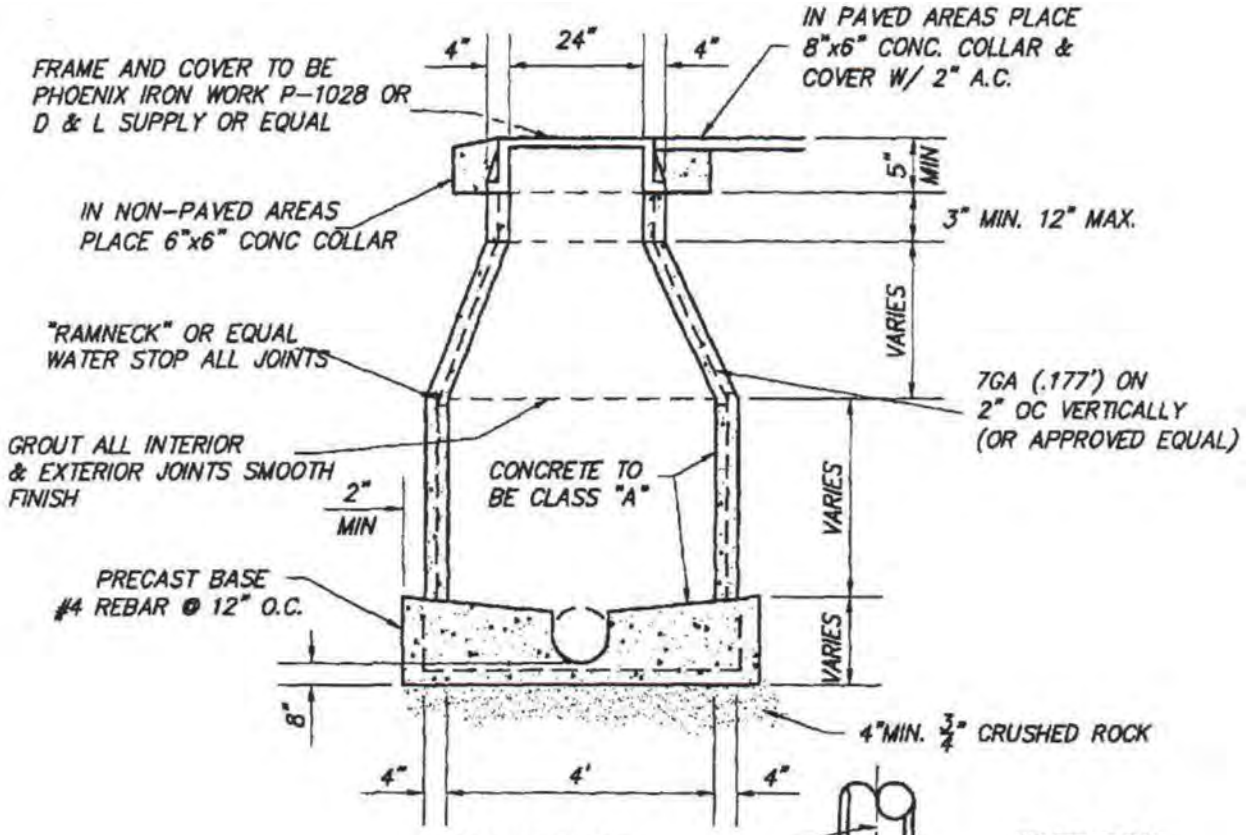

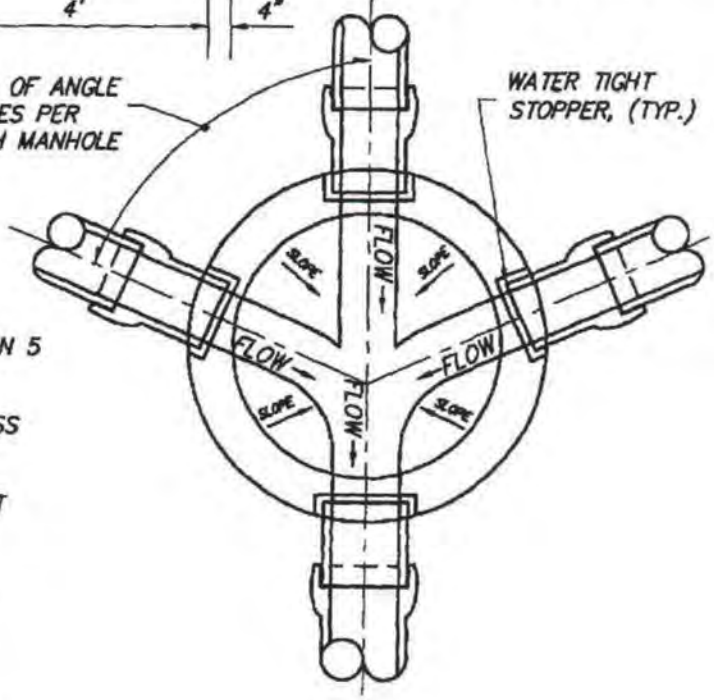

NOTES:

1. ECCENTRIC CONE FOR DEPTHS GREATER THAN 5 FEET.
2. ALL MANHOLE BASES TO BE PRECAST UNLESS OTHERWISE APPROVED BY CITY ENGINEER.
3. BASE TO HAVE 0.1' FALL FROM INVERT INLET TO INVERT EXIT.
4. CLASS "A" CONCRETE 3000 P.S.I. MIN. 28 DAYS.
5. 60" MANHOLES TO BE USED FOR PIPES GREATER THEN 24" IN DIAMETER.
6. NO CAULDER OR REPAIR COUPLINGS SHALL BE USED FOR NEW CONSTRUCTION.
7. ALL M.H. JOINTS TO BE TONGUE AND GROOVE
8. SEE SS-9 FOR BACKFILL REQUIREMENTS.

DATE: AUGUST 2011	DRAWN BY: LM	APPROVED BY: DHS	SCALE: NONE

CITY OF WHEATLAND INC. 1874 DEPARTMENT OF PUBLIC WORKS	SHALLOW MANHOLE DETAIL (6"-24" DIAMETER PIPE)	SS-3

NOTE:

1. ALL INSIDE DROP PIPING TO BE P.V.C. OR A.B.S.
2. CEMENT ALL JOINTS.
3. DROP CONNECTION PIPE AND FITTINGS TO BE SAME SIZE AS ENTERING PIPE. CLAMPS TO BE 11/2:x12 GAUGE
4. STAINLESS STEEL, ANCHORED TO M.H. WALL WITH 2-1/2" CADMIUM PLATED BOLTS.

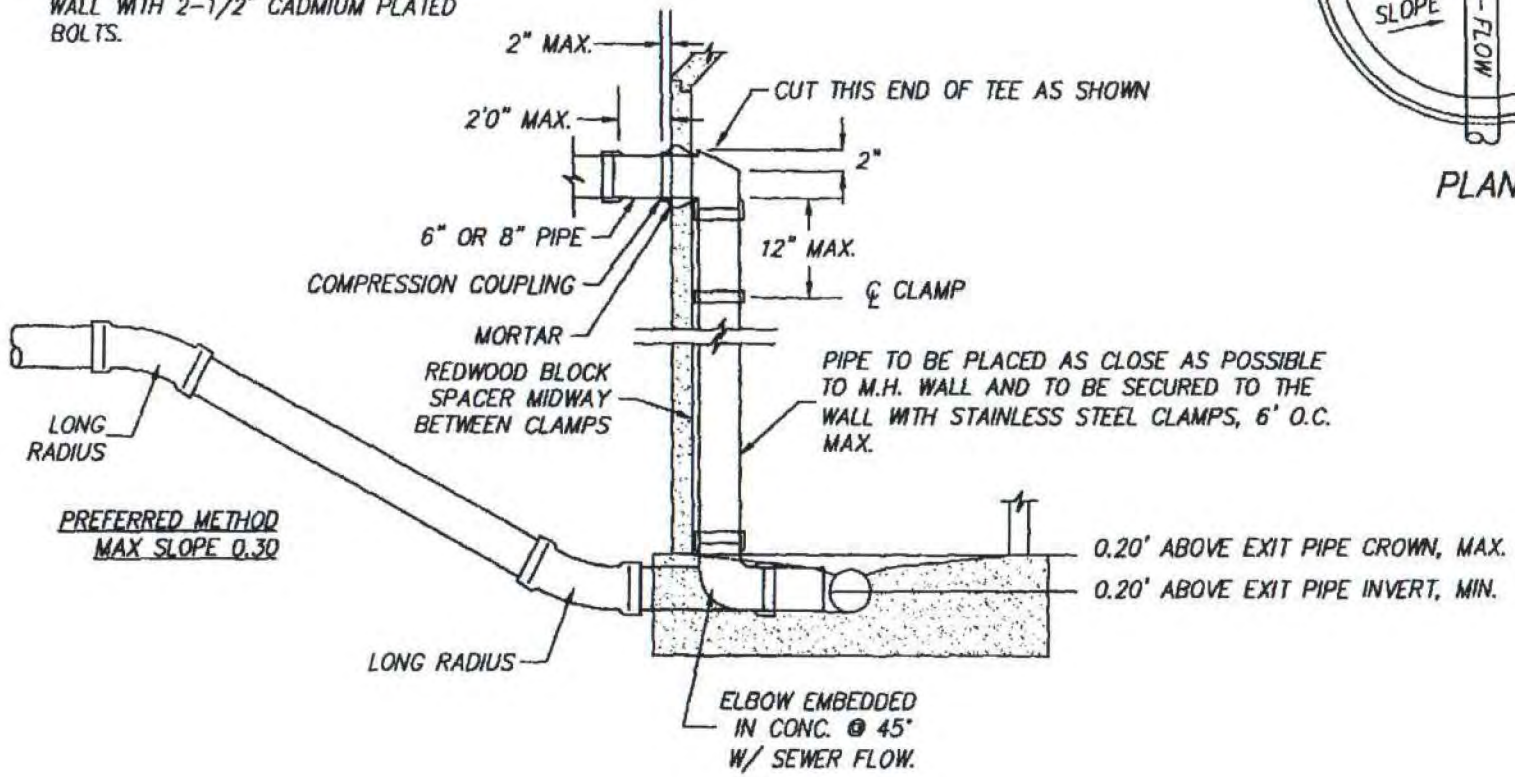

PROFILE

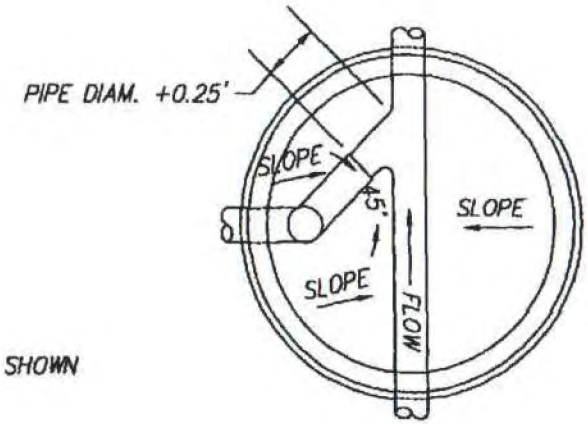

PLAN

CITY OF WHEATLAND INC. 1874 DEPARTMENT OF PUBLIC WORKS	STANDARD INSIDE DROP MANHOLE	SCALE: NONE DATE: AUGUST 2011 DRAWN BY: LM APPROVED BY: DHS	SS-4

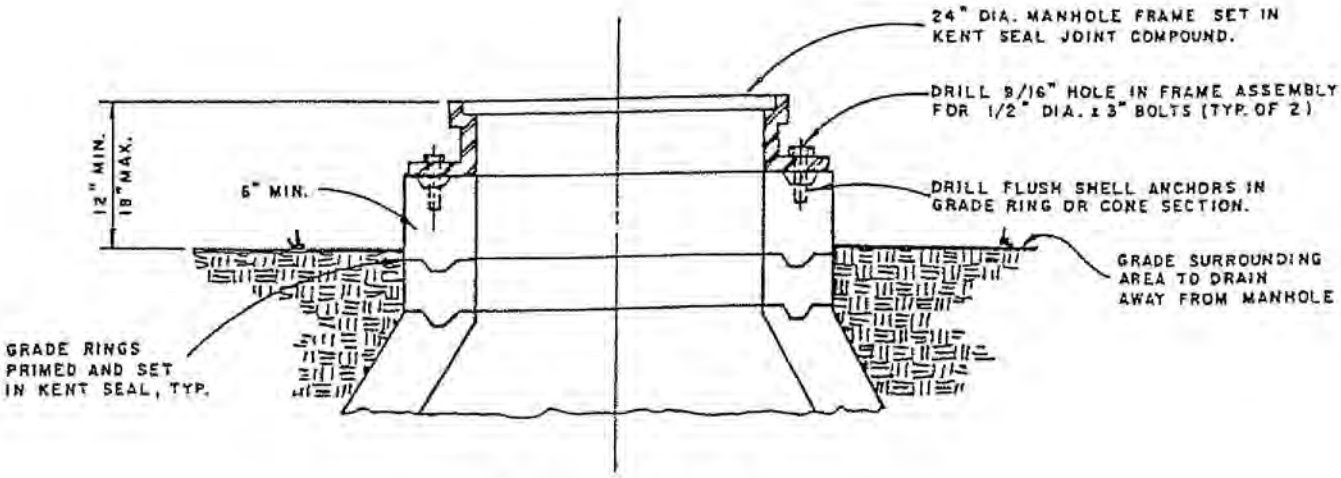

MANHOLES IN UNIMPROVED LOCATIONS

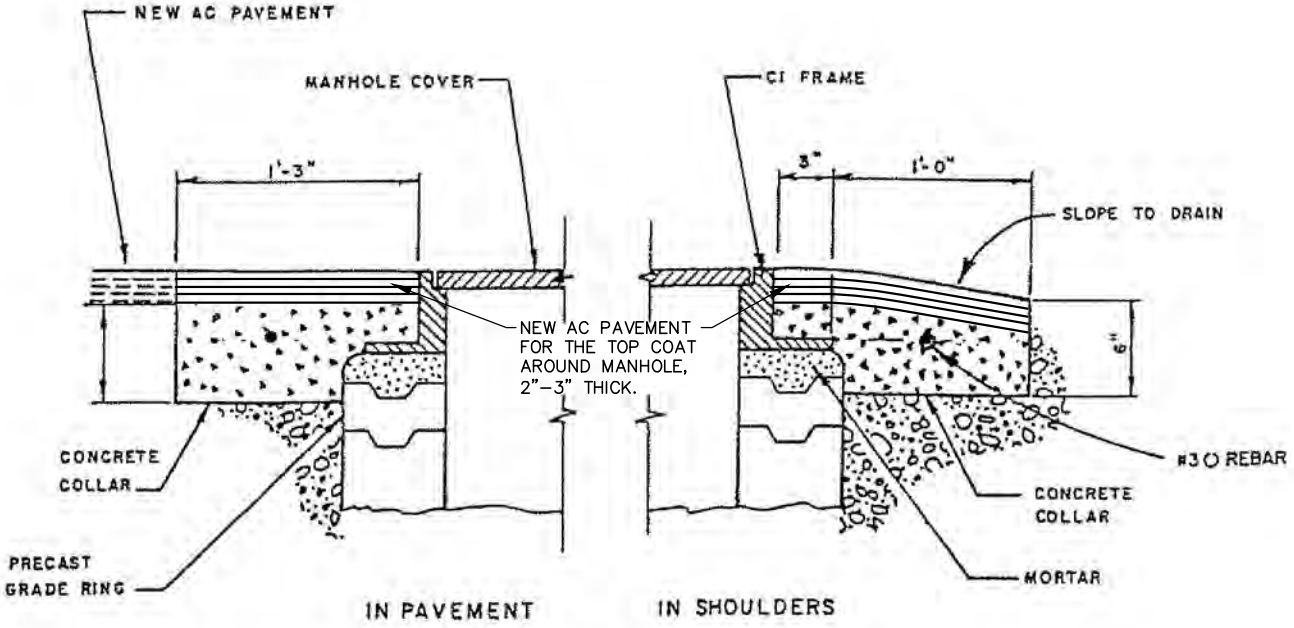

COVER SETTING DETAIL FOR MANHOLES IN ROADWAYS

DATE: AUGUST 2011	DRAWN BY: LM	APPROVED BY: DHS	SCALE: NONE

CITY OF WHEATLAND INC. 1874 DEPARTMENT OF PUBLIC WORKS	STANDARD SEWER SYSTEM DETAILS	SS-5

ACCEPTABLE MANUFACTURERS

PHOENIX	P-1090
SBF	1900
D B L	A-1024

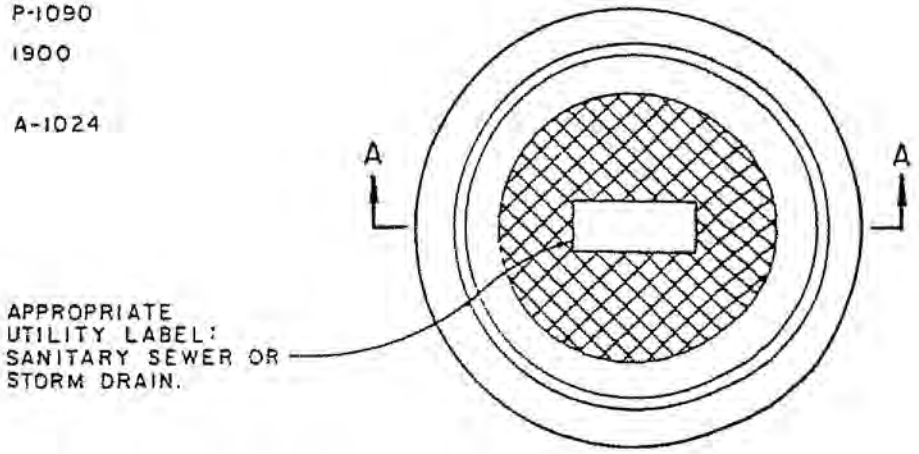

PLAN

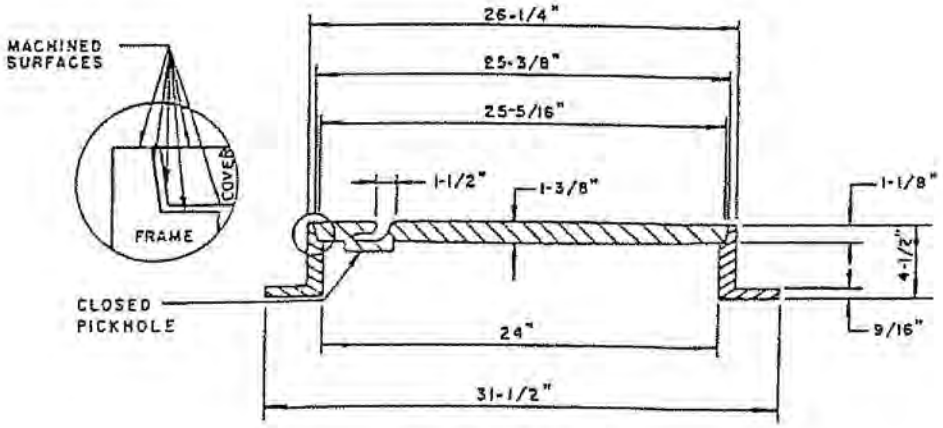

SECTION A

COVER 130 LBS. (MIN.)
FRAME 138 LBS. (MIN.)

NOTES:

1. FRAME AND COVER FULLY MACHINED ON SURFACES AS SHOWN FOR PERFECT NO-ROCK FIT.
2. STANDARD COVER MARKINGS AVAILABLE: "SANITARY SEWER" OR "STORM DRAIN". CASTING SHALL BE ORDERED WITH APPROPRIATE MARKING.
3. CASTINGS SHALL BE DIPPED IN ASPHALT PAINT.
4. WATERTIGHT COVER AVAILABLE WITH R/G DESIGNATION.
5. ALL PARTS OF ACCEPTABLE COVER ASSEMBLIES ARE INTERCHANGEABLE.

DATE: AUGUST 2011	DRAWN BY: LM	APPROVED BY: DHS	SCALE: NONE

CITY OF WHEATLAND INC. 1874 DEPARTMENT OF PUBLIC WORKS	24" MANHOLE FRAME & COVER ASSEMBLY	SS-6

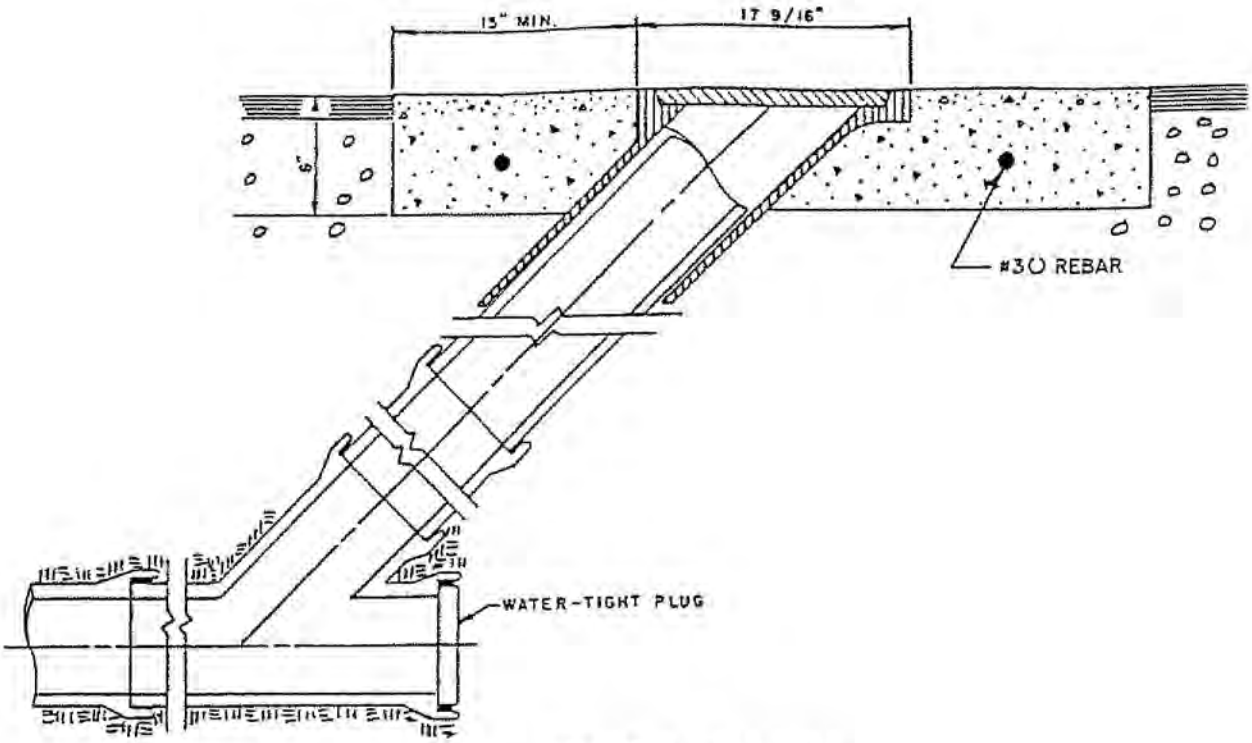

PAVED ALLEYS
AND SHOULDERS

PHOENIX	P-7004
SBF	1249
D & L	H-6521

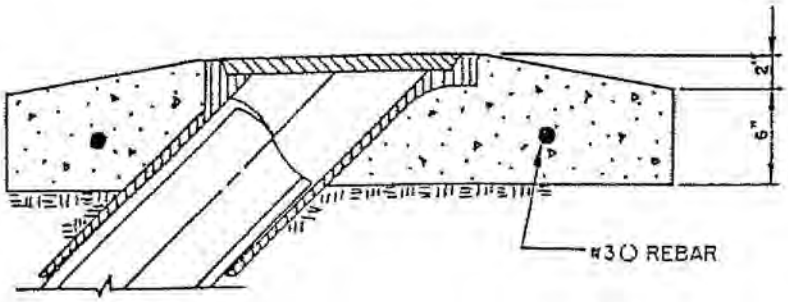

INSTALLATION SAME
AS PAVED STREETS

UNPAVED ALLEYS
AND SHOULDERS

NOTES:

1. ALL WORK TO BE DONE AND ALL MATERIALS SUPPLIED SHALL CONFORM TO THE "CITY STANDARD SPECIFICATIONS".
2. EIGHTH (1/8) BEND MAY BE USED IN PLACE OF WYE WITH THE APPROVAL OF THE CITY ENGINEER.
3. ALL CONCRETE SHALL BE CLASS B P.C.C.
4. CONCRETE COLLAR AROUND STREET CASTING SHALL BE OVAL IN SHAPE AS IN CASTING.

DATE: AUGUST 2011	DRAWN BY: LM	APPROVED BY: DHS	SCALE: NONE

CITY OF WHEATLAND INC. 1874 DEPARTMENT OF PUBLIC WORKS	DETAIL OF 6" RODHOLE INSTALLATION	SS-7

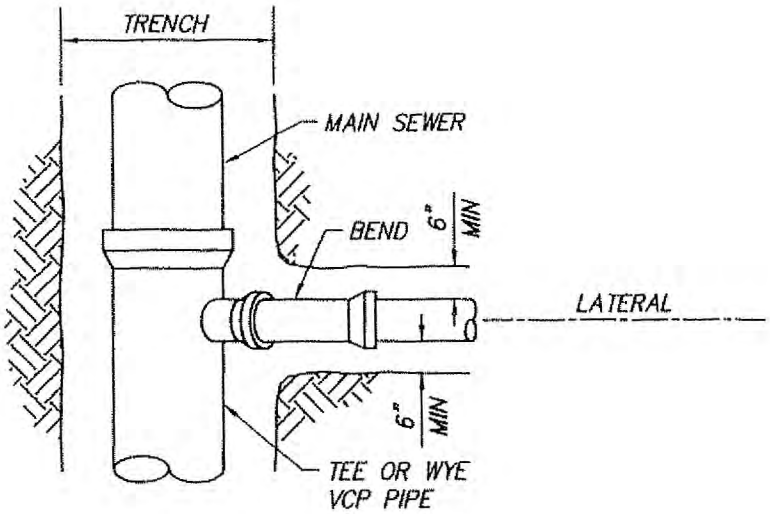

PLAN

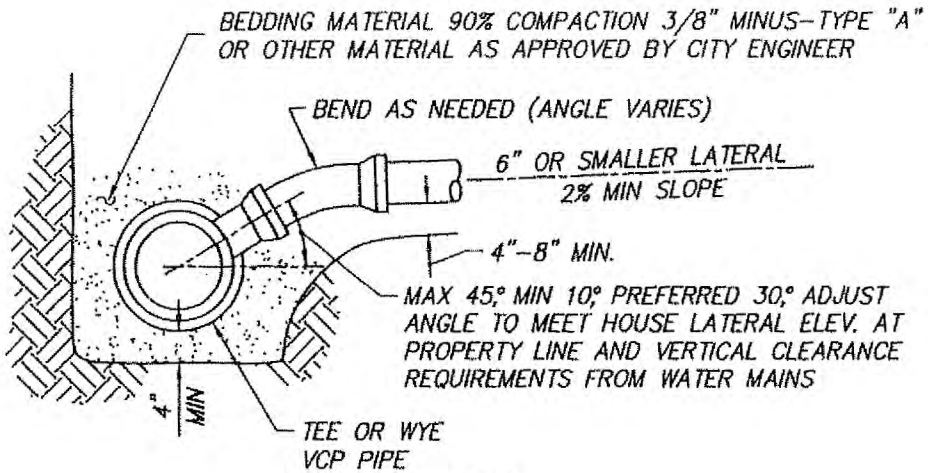

ELEVATION

NOTES:

1. EXTRA CARE SHALL BE TAKEN IN PLACING & COMPACTING MATERIAL FOR TEE SUPPORT, TAMP UNDER & AROUND ALL FITTINGS.
2. TYPE "A" 3/8" MINUS PER SEWER TRENCH DETAIL SS-1. (24" ABOVE PIPE IF TYPE D MATERIAL IS USED IN INTERMEDIATE ZONE).

CITY OF WHEATLAND INC. 1874 DEPARTMENT OF PUBLIC WORKS	SEWER TEE DETAIL	SCALE: NONE DATE: AUGUST 2011 DRAWN BY: LM APPROVED BY: DHS	SS-8

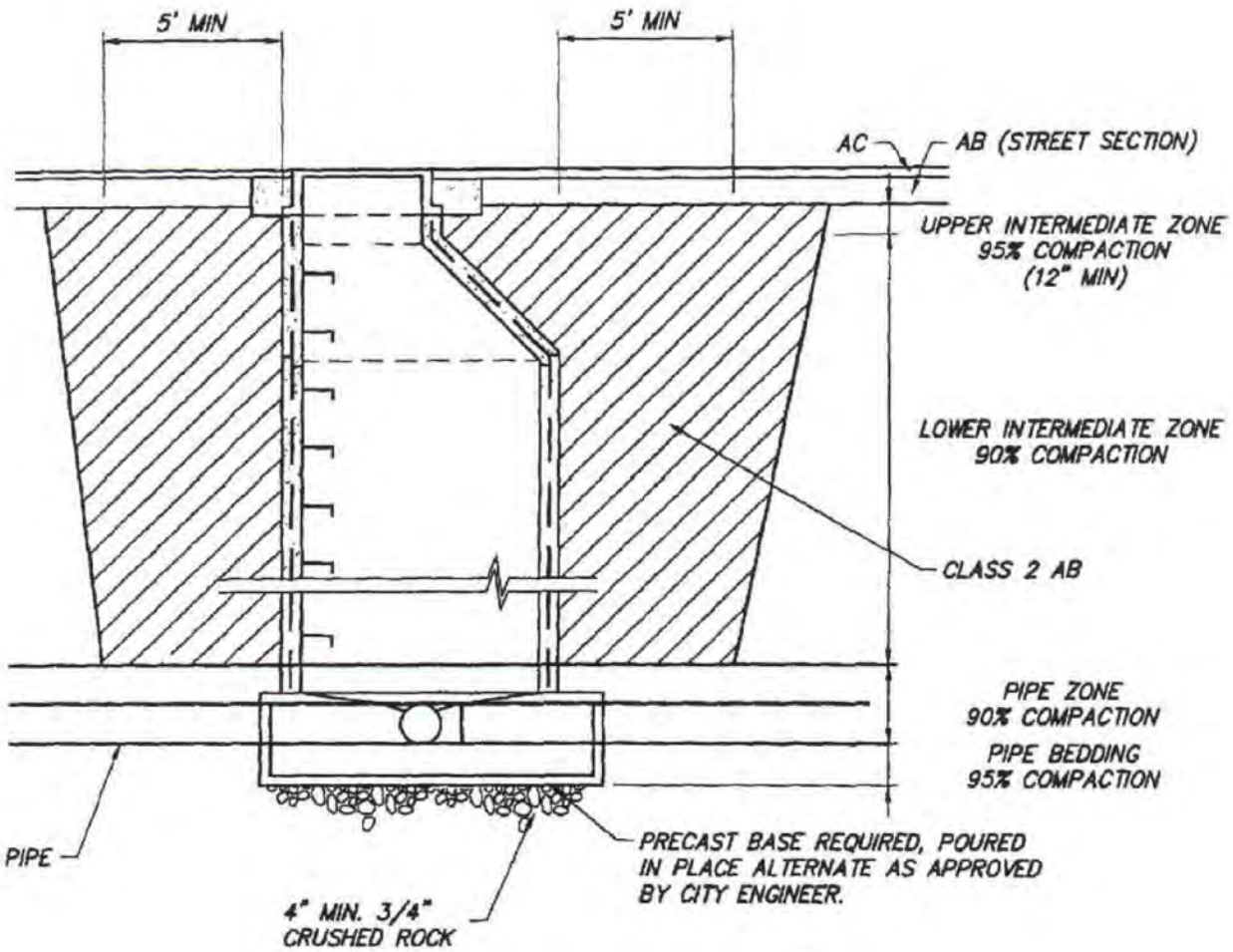

DATE: AUGUST 2011	DRAWN BY: LM	APPROVED BY: DHS	SCALE: NONE

DEPARTMENT OF PUBLIC WORKS	MANHOLE BACKFILL DETAIL	SS-9

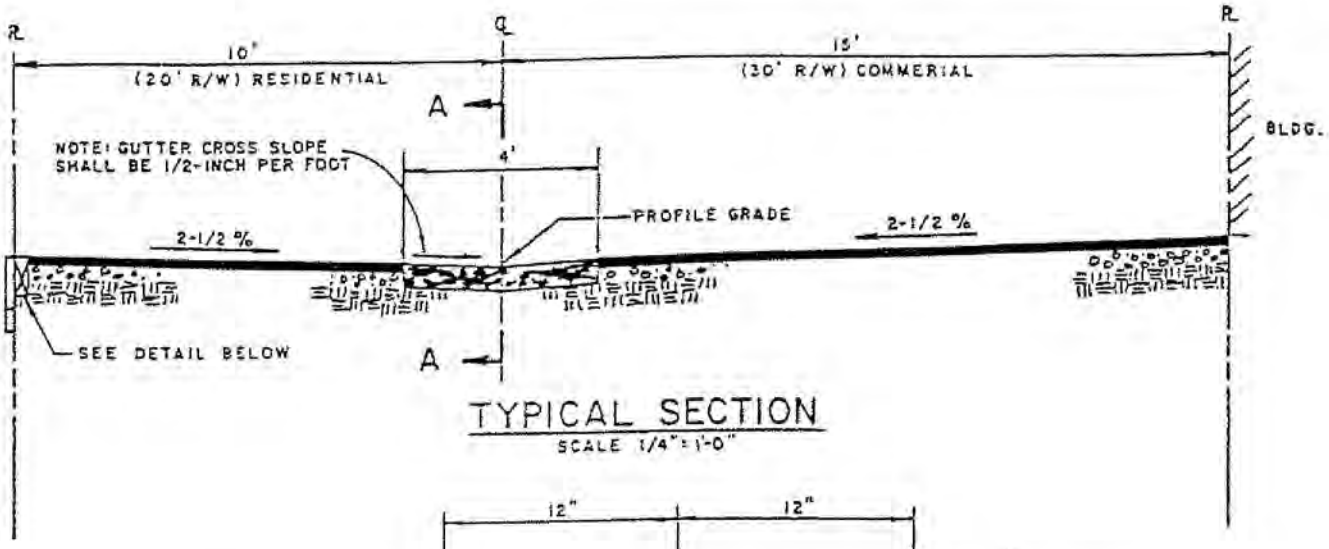

TYPICAL SECTION
SCALE 1/4" = 1'-0"

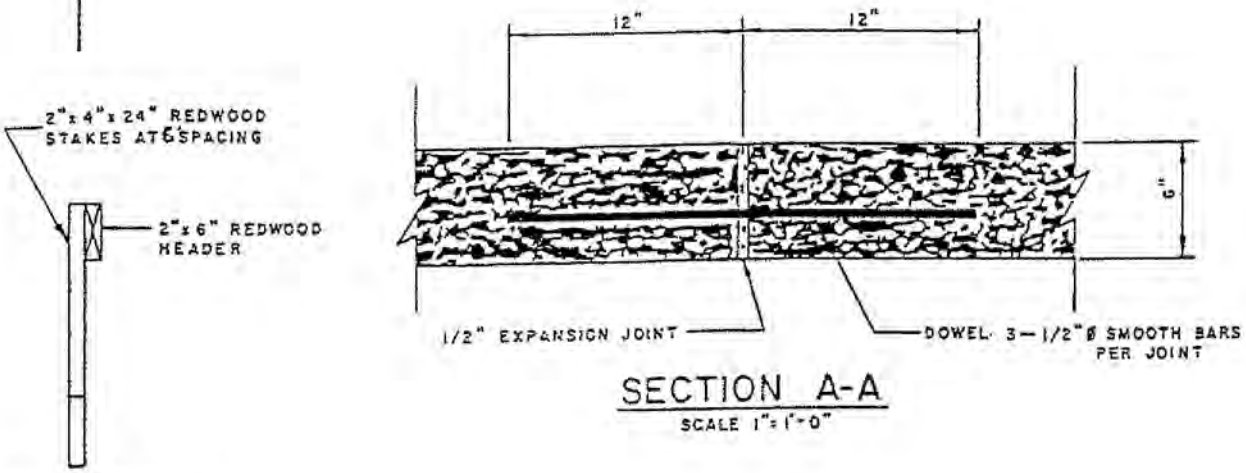

SECTION A-A
SCALE 1" = 1'-0"

HEADER DETAIL
SCALE 1/2" = 1'-0"

NOTES:

1. SURFACING AND BASE THICKNESS SHALL BE DETERMINED IN ACCORDANCE WITH THE CITY STANDARD SPECIFICATIONS, OR AS DIRECTED BY THE ENGINEER, BUT IN NO CASE BE LESS THAN OUTLINED BELOW.
2. HEADERS SHALL BE USED EXCEPT WHEN BUILDINGS OR OTHER PERMANENT IMPROVEMENTS ABUT THE ALLEY, AND SHALL BE LEFT IN PLACE AFTER CONSTRUCTION.
3. INSTALL EXPANSION JOINTS EVERY 15' IN VALLEY GUTTER.
4. EXPANSION JOINTS TO BE DOWELED AS SHOWN ABOVE.
5. REDWOOD HEADERS TO BE FOUNDATION GRADE OR BETTER.
6. WORK PERFORMED AND MATERIALS SUPPLIED SHALL CONFORM TO CITY STANDARD SPECIFICATIONS.
7. ALL CONCRETE SHALL BE CLASS B, P.C.C.

STRUCTURAL DESIGN SECTION
(MINIMUM)

AGGREGATE BASE — 0.33'
PRIME COAT —— 0.25 GAL./SQ.YD.
ASPHALT CONCRETE — 0.13'
FOG SEAL —— 0.10 GAL./SQ.YD.

DATE: AUGUST 2011	DRAWN BY: LM	APPROVED BY: DHS	SCALE: NONE

CITY OF WHEATLAND INC. 1874 DEPARTMENT OF PUBLIC WORKS	ALLEY & VALLEY GUTTER	SD-1

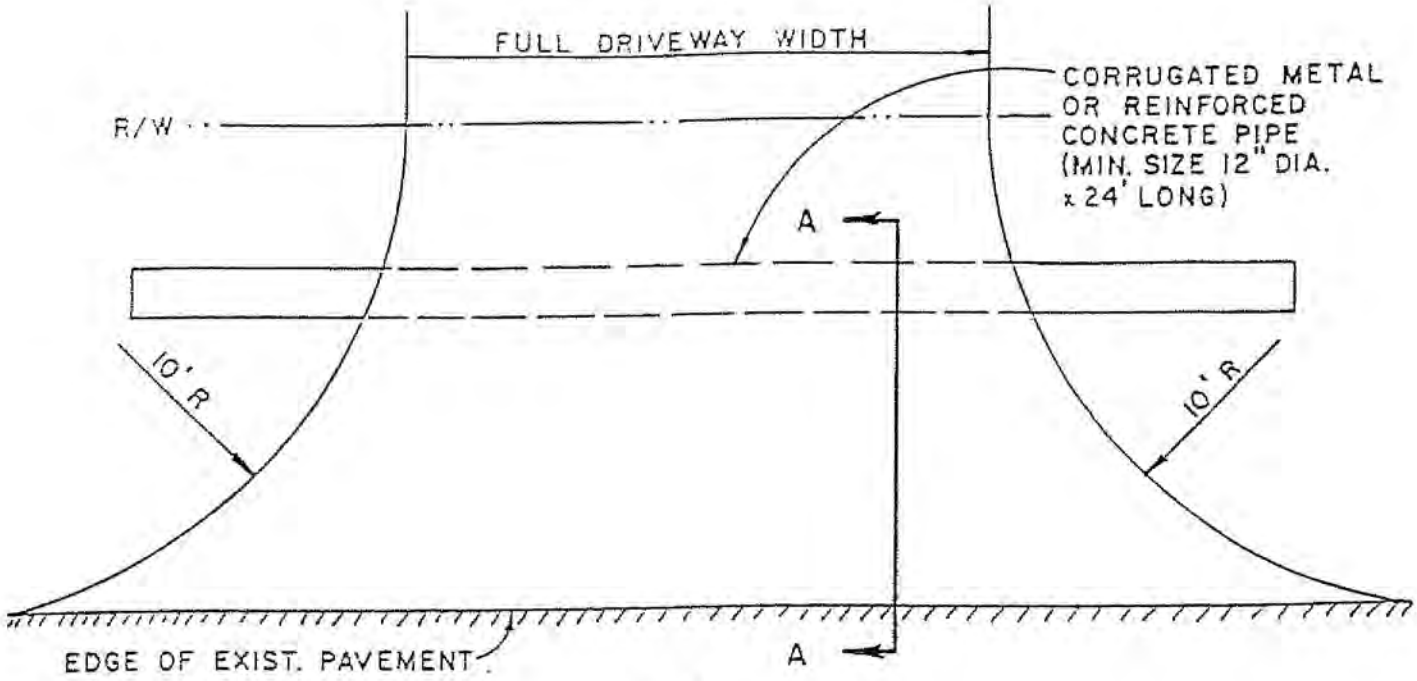

PLAN

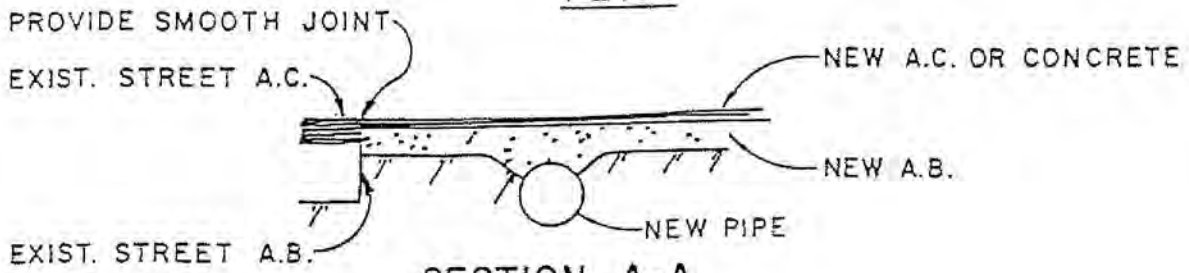

SECTION A-A

NOTES:

1. REFER TO CITY STANDARD G3 FOR PIPE BACKFILL REQUIREMENTS.
2. CONCRETE SHALL BE CLASS "B" P.C.C.

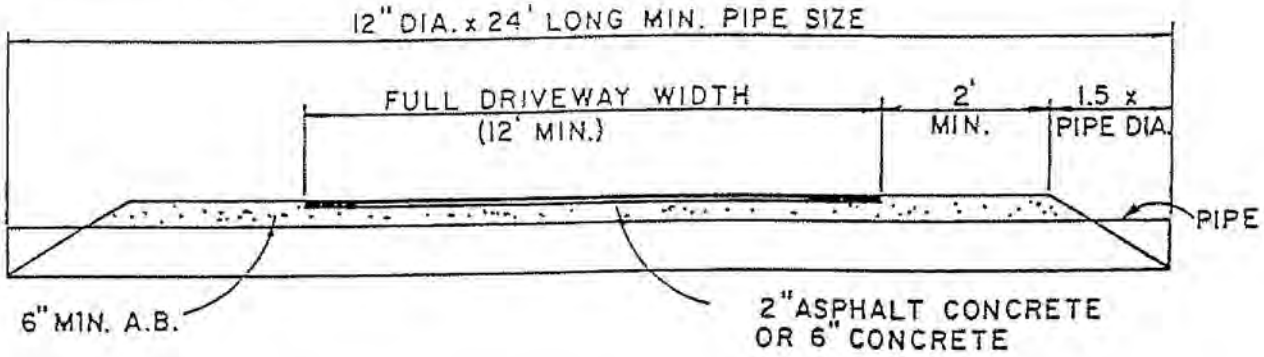

TYPICAL SECTION

DATE: AUGUST 2011	DRAWN BY: LM	APPROVED BY: DHS	SCALE: NONE

DEPARTMENT OF PUBLIC WORKS	STANDARD DRIVEWAY CULVERT	SD-2

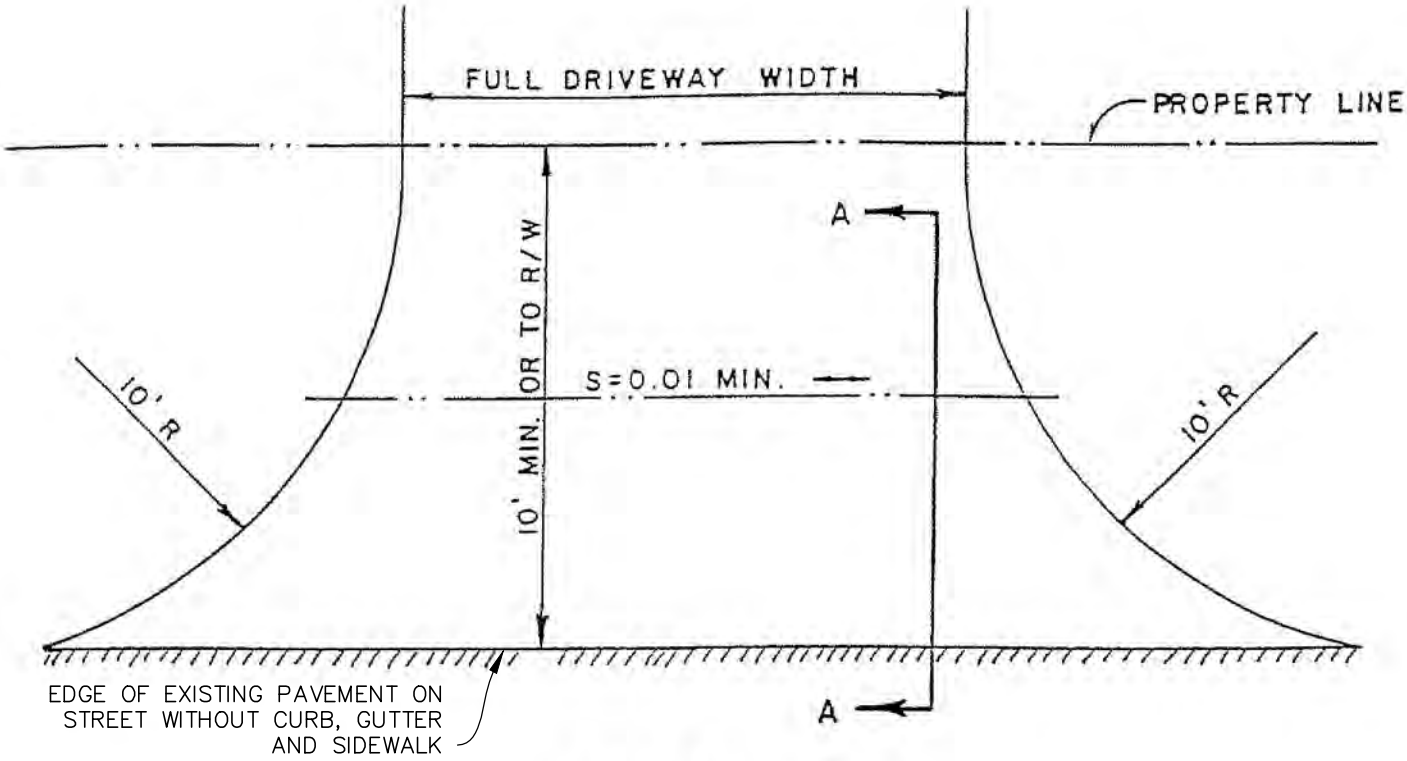

PLAN

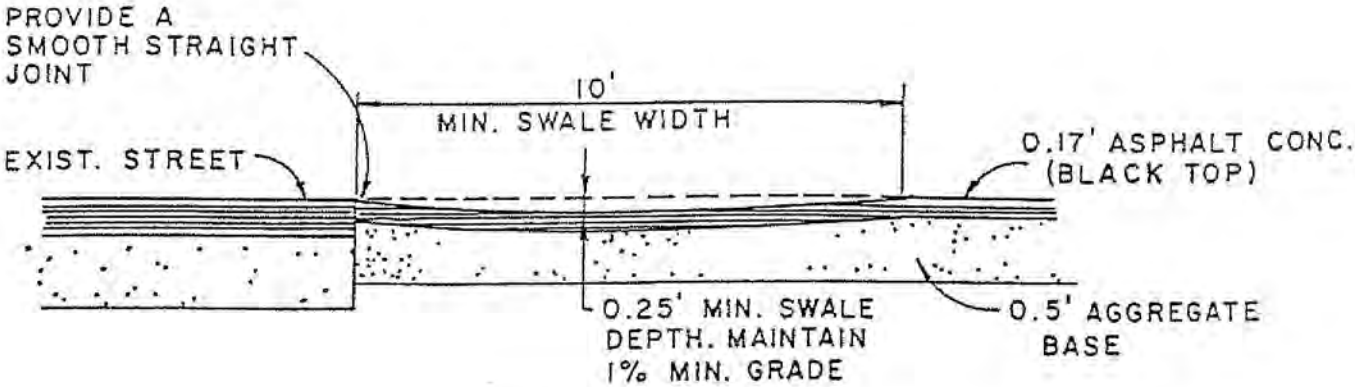

SECTION A-A

DATE: AUGUST 2011	DRAWN BY: LM	APPROVED BY: DHS	SCALE: NONE

CITY OF WHEATLAND INC. 1874 DEPARTMENT OF PUBLIC WORKS	DRIVEWAY APPROACH SWALE	SD-3

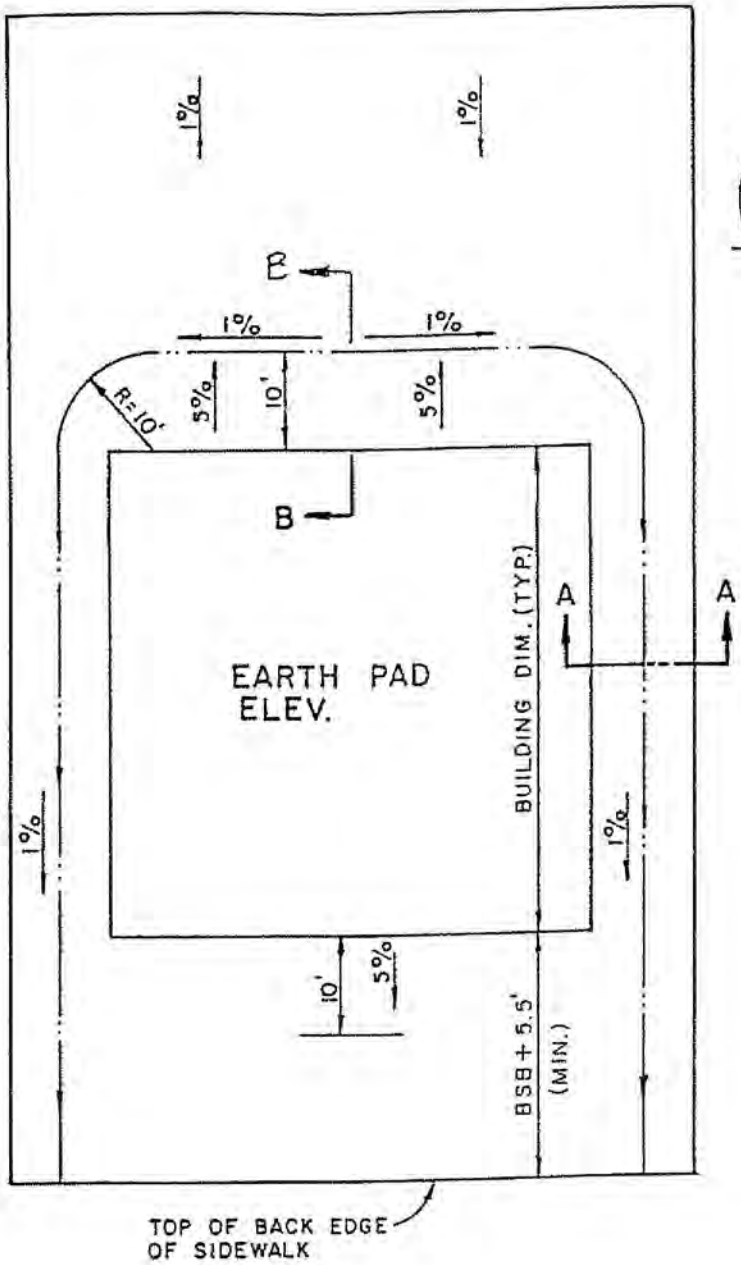

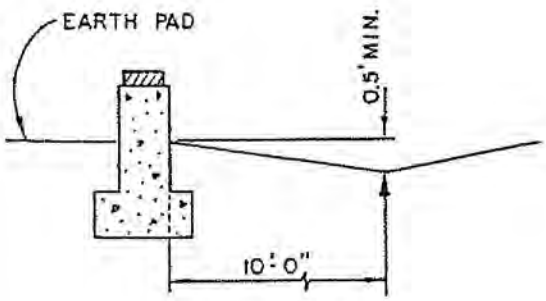

SECTION B

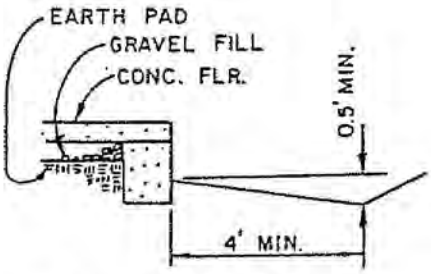

SECTION A-A

NOTE: MINIMUM EARTH PAD ELEVATION = MAXIMUM SWALE ELEVATION + 0.5'

DATE: AUGUST 2011	DRAWN BY: LM	APPROVED BY: DHS	SCALE: NONE

CITY OF WHEATLAND INC. 1874 DEPARTMENT OF PUBLIC WORKS	MINIMUM LOT GRADES	SD-4

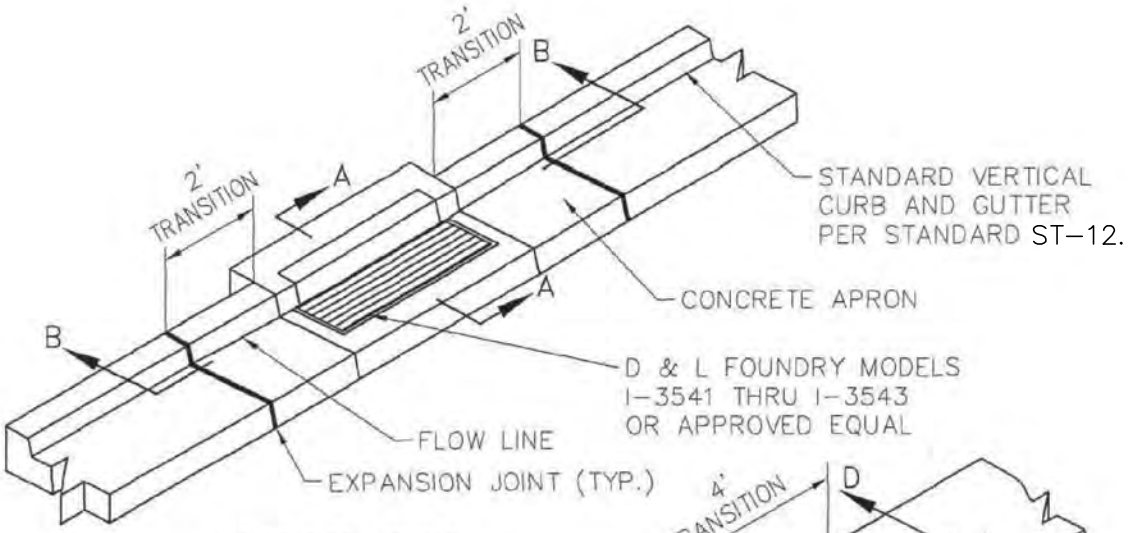

VERTICAL CURB

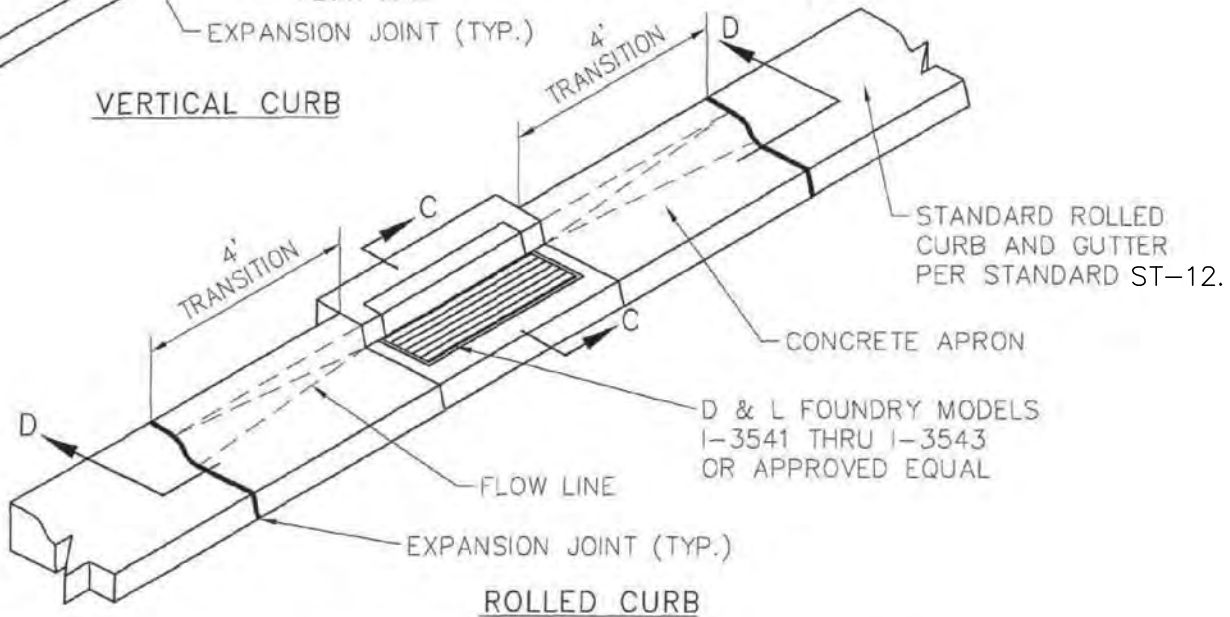

ROLLED CURB

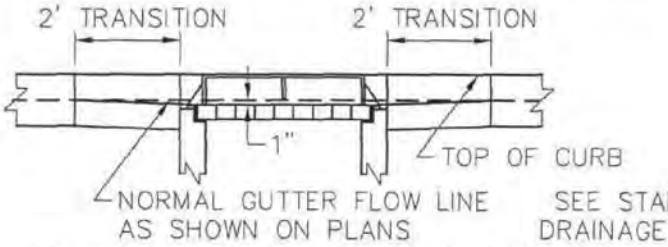

SECTION B-B (VERTICAL CURB)

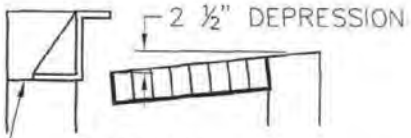

SECTION A-A

SEE STANDARD DRAINAGE INLET DETAIL

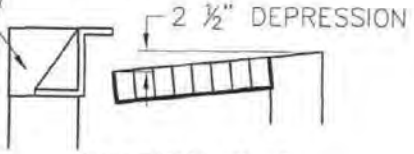

SECTION C-C

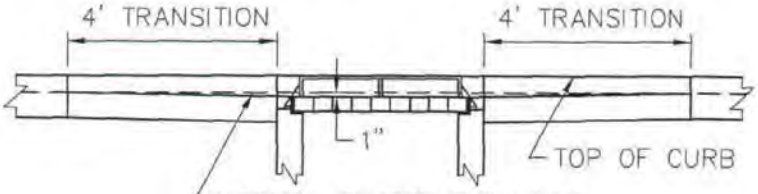

SECTION D-D (ROLLED CURB)

DATE: AUGUST 2011	DRAWN BY: LM	APPROVED BY: DHS	SCALE: NONE

DEPARTMENT OF PUBLIC WORKS	INLET TRANSITIONS	SD-5

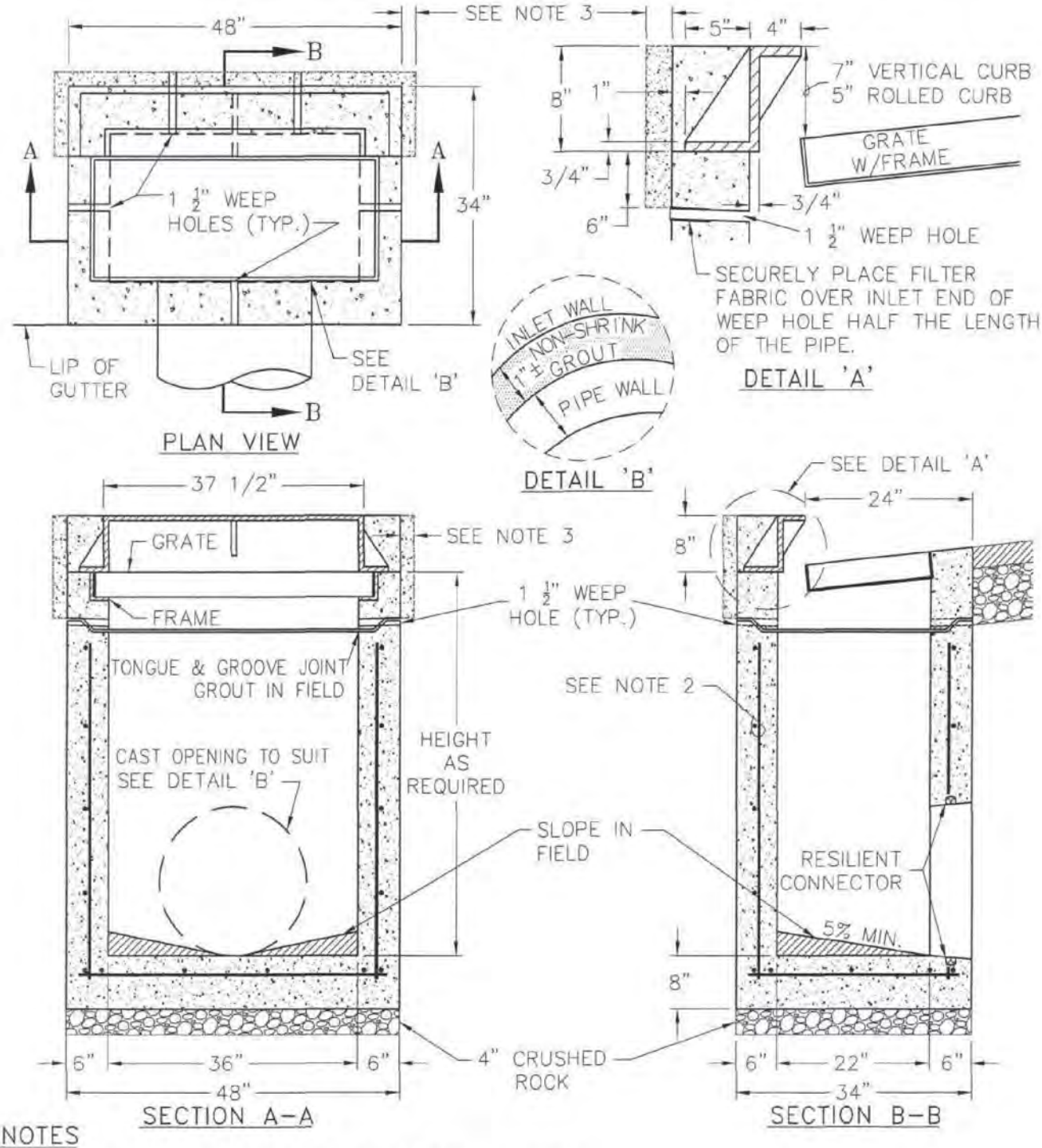

NOTES

1. INLET CAN BE PRECAST MANUFACTURED CONCRETE UNIT OR CAST IN PLACE DESIGNED FOR H-20 LOADING.
2. REINFORCING SHALL BE #4 BARS @ 12" O.C. (MAX.) EACH WAY OR 4"X4"-6-6 GAUGE W.W.F. IN THE WALL AND BASE.
3. ADD 2" CONCRETE COLLAR FOR DETACHED SIDEWALK.
4. PLACE CAST IRON HOOD, FRAME AND GRATE. D&L FOUNDRY MODEL I-3541, 3542, 3543 OR EQUAL.

DATE: AUGUST 2011	DRAWN BY: LM	APPROVED BY: DHS	SCALE: NONE

CITY OF WHEATLAND INC. 1874 DEPARTMENT OF PUBLIC WORKS	DRAIN INLET	SD-6

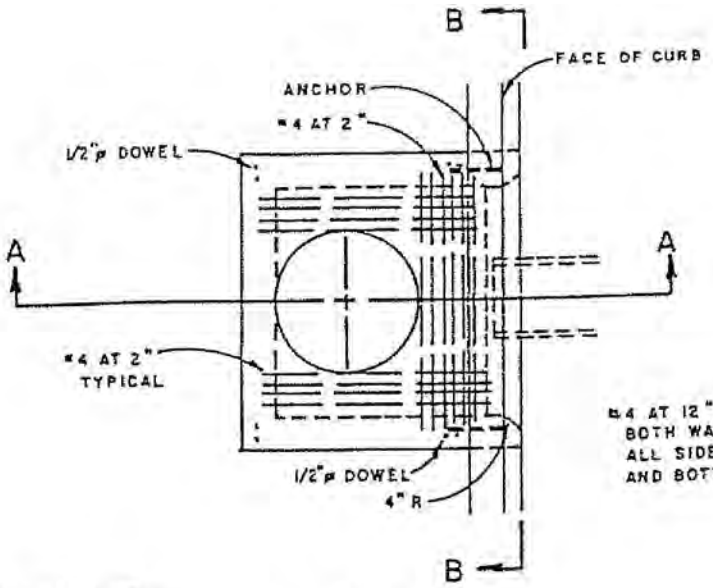

PLAN

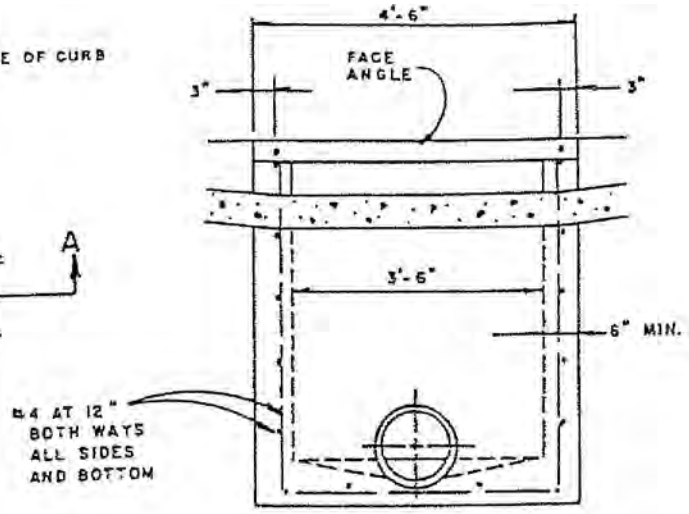

SECTION B-B

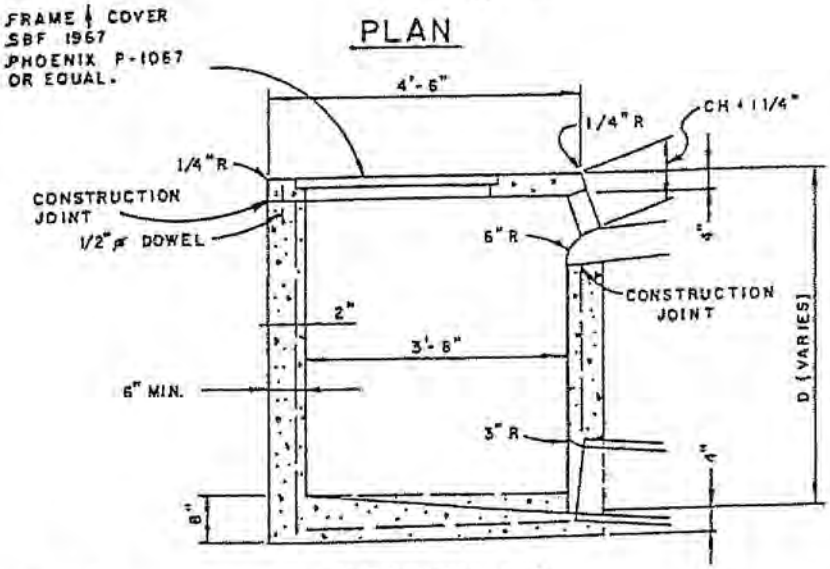

SECTION A-A

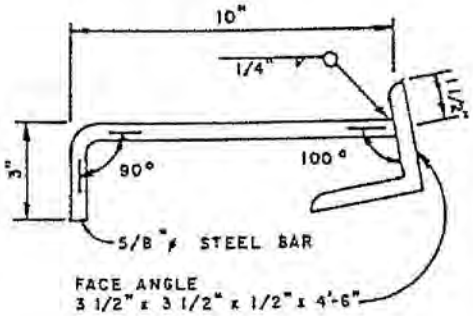

FACE ANGLE & ANCHOR DETAIL

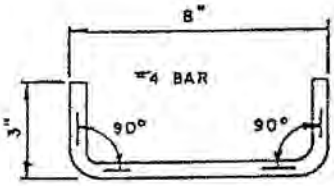

DOWEL DETAIL

NOTES:

1. CONNECTION PIPES AND OUTLET PIPES MAY BE PLACED IN ANY POSITION AROUND THE WALLS.
2. CURVATURE OF THE LIP AND SIDE WALLS AT GUTTER OPENING SHALL BE FORMED BY CURVED FORMS.
3. CURB FACE HEIGHT OF DROP INLET SHALL BE THAT OF THE EXISTING CURB PLUS 1 1/4".
4. INSTALL 3'-0" LONG TRANSITION SECTION EACH SIDE OF INLET TO DEPRESS THE GUTTER FLOWLINE 1 1/4" AT THE INLET.
5. MINIMUM CLEAR SPACING BETWEEN FACE OF CONCRETE AND REINFORCING STEEL TO BE 1 1/2". MAXIMUM DEPTH "D" SHALL BE 8'-0".
6. FACE ANGLE SHALL BE GALVANIZED; AFTER FABRICATION ALL SURFACES SHALL BE FREE OF RUST AND OIL AND NEATLY SOLDERED OVER WITH 50-50 SOLDER.
7. WHEN PRECAST CONCRETE BOXES ARE FURNISHED, THE WALL THICKNESS MAY BE 4" WITH REINFORCEMENT AND THE FACE ANGLE MAY BE 3/8" STOCK.
8. CONCRETE SHALL BE CLASS B P.C.C.

STEEL LIST FOR TOP	
DESCRIPTION	REQ'D
#4 BAR 4'-4" LONG	7
#4 BAR 3' 11" LONG	8
#4 BAR 1'-7" LONG	3
FACE ANGLE 4'-6"	1
DOWELS	4
FRAME & COVER	1

DATE: AUGUST 2011	DRAWN BY: LM	APPROVED BY: DHS	SCALE: NONE

CITY OF WHEATLAND INC. 1874 DEPARTMENT OF PUBLIC WORKS	DROP INLET TYPE 2	SD-7

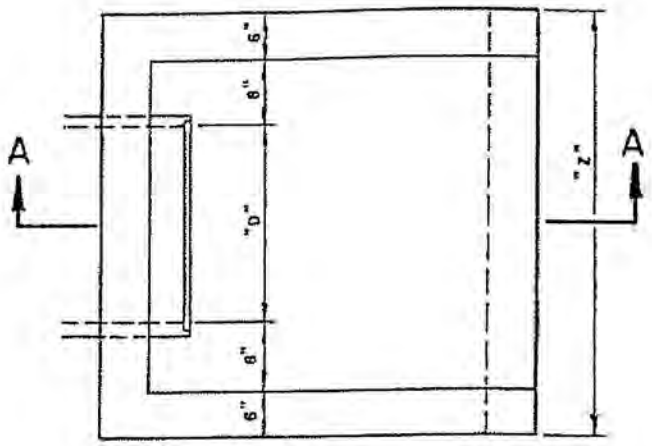

PLAN VIEW

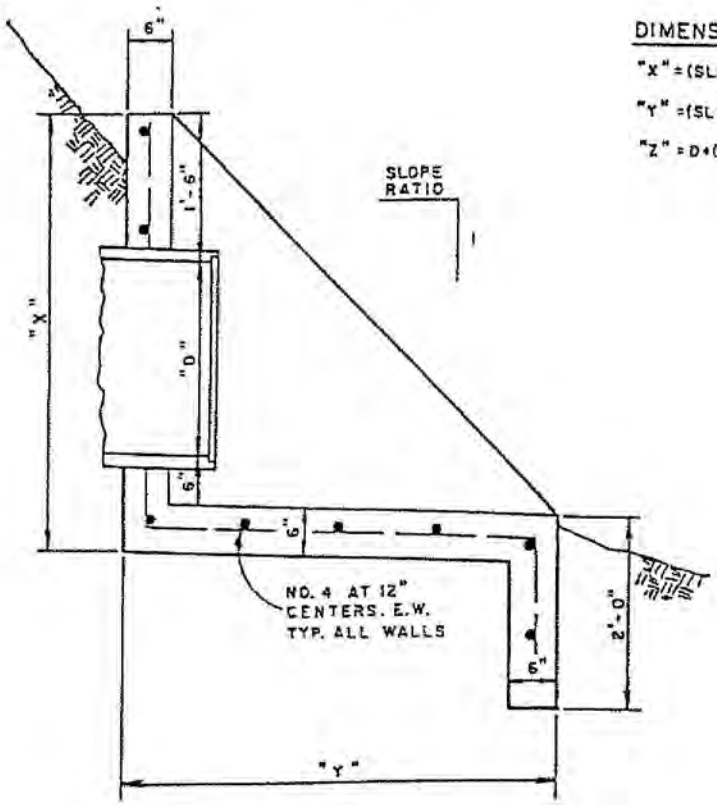

DIMENSIONS:

"X" = (SLOPE RATIO)(D+2'-6")

"Y" = (SLOPE RATIO)(D+2'-6")

"Z" = D+(2'-4")

SECTION A-A

DATE: AUGUST 2011	DRAWN BY: LM	APPROVED BY: DHS	SCALE: NONE

CITY OF WHEATLAND INC. 1874 DEPARTMENT OF PUBLIC WORKS	STANDARD HEADWALL STRUCTURAL DETAILS	SD-8

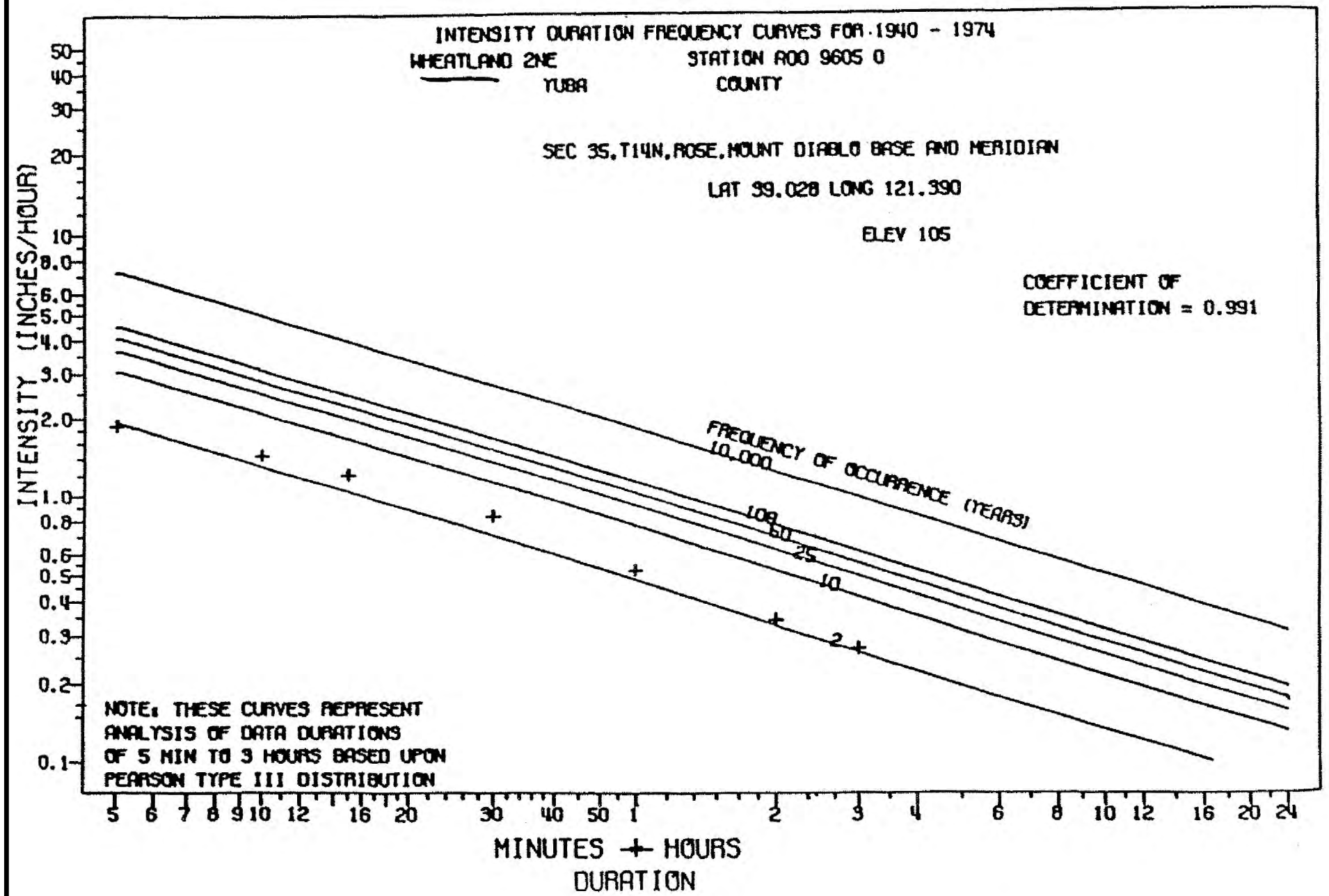

DEPARTMENT OF PUBLIC WORKS	INTENSITY DURATION FREQUENCY CURVE	SCALE: NONE DATE: AUGUST 2011 DRAWN BY: LM APPROVED BY: DHS	SD-9